WARNINGS

SUFFOCATION HAZARD. FSCT fabric does not "breathe". Open windows and flaps as necessary to ensure adequate ventilation. If all openings are closed, it is possible to use up all of the oxygen contained in the tent, especially during sleeping hours, RESULTING IN DEATH.

FIRE HAZARD. When using the M-1949 (pot belly) or M-1951 (Yukon) stove inside the Five Soldier Crew Tent - always place the heater onto a metal sheet or inside a sandbox to reduce the possibility of a fuel spill on the tent floor. Such a fuel spill can degrade the fabric or create a fire hazard.

Seam sealer and solvent are extremely flammable and fumes toxic - contains toluene and isopropyl alcohol. Do Not smoke or use seam sealer or solvent near open flame. Death or serious injury may result from explosion or fire.

Use seam sealer and solvent in an open, well-ventilated area away from sources of combustion; indoors wear a respirator. Avoid contact with skin and eyes. Wear goggles and gloves when using seam sealer and solvent. Inhalation of fumes may cause toxic sickness.

TECHNICAL MANUAL

NO. 10-8340-226-13&P

HEADQUARTERS
DEPARTMENT OF THE ARMY
WASHINGTON, D.C., 28 November 1994

Operator's, Unit, and Direct Support Maintenance Manual
Including Repair Parts and Special Tools List
For
Five Soldier Crew Tent
Type I, NSN 8340-01-368-7214
Type II, NSN 8340-01-368-7215

REPORTING ERRORS AND RECOMMENDING IMPROVEMENTS

You can help improve this manual. If you find any mistakes or if you know of a way to improve these procedures, please let us know. Mail your letter or DA Form 2028 (Recommended Changes to Publications and Blank Forms), or DA Form 2028-2 located in the back of this manual directly to: Commander, US Army Aviation and Troop Command, ATTN: AMSAT-I-MP, 4300 Goodfellow Blvd., St. Louis, MO 63120-1798. A reply will be furnished directly to you.

DISTRIBUTION STATEMENT A: Approved for public release; distribution is unlimited.

TABLE OF CONTENTS

Chapter/Section		Page
CHAPTER 1.	INTRODUCTION	1-1
Section I.	General Information	1-1
Section II.	Equipment Description	1-3
Section III.	Technical Principles of Operation	1-6
CHAPTER 2.	OPERATING INSTRUCTIONS	2-1
Section I.	Description and Use of Operator's Controls and Indicators	2-1
Section II.	Operator's Preventive Maintenance Checks and Services (PMCS)	2-1
Section III.	Operation Under Usual Conditions	2-9
Section IV.	Operation Under Unusual Conditions	2-25

TABLE OF CONTENTS - Cont'd.

Chapter/Section		Page
APPENDIX C.	REPAIR PARTS AND SPECIAL TOOLS LIST	C-1
APPENDIX D.	COMPONENTS OF END ITEM AND BASIC ISSUE ITEM LIST	D-1
APPENDIX E.	ADDITIONAL AUTHORIZATION LIST	E-1
APPENDIX F.	EXPENDABLE/DURABLE SUPPLIES AND MATERIALS LIST	F-1
	ALPHABETICAL INDEX	INDEX-1

HOW TO USE THIS MANUAL

This manual (TM 10-8340-226-13&P) contains general information, operating instructions, PMCS instructions, troubleshooting steps, and maintenance instructions for the Five Soldier Crew Tent (FSCT). Use the front cover index and thumb bleeds at the edge of the pages to quickly find the sections of the manual shown on the cover.

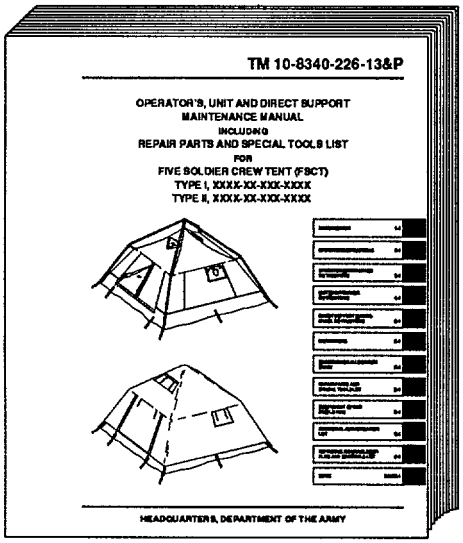

The manual has been divided into chapters, sections and paragraphs that are numbered in sequence. Pages, paragraphs, and illustrations are numbered by chapter. For example, chapter 2, page 3 is marked 2-3; chapter 3, paragraph 5 is marked 3-5; figure 2-3 is the third illustration in chapter 2. To quickly find specific information, use the Table of Contents. For example, the front cover index states that Chapter 1 begins on page 1-1. The Table of Contents on page i tells you the exact page where the paragraph you want is located.

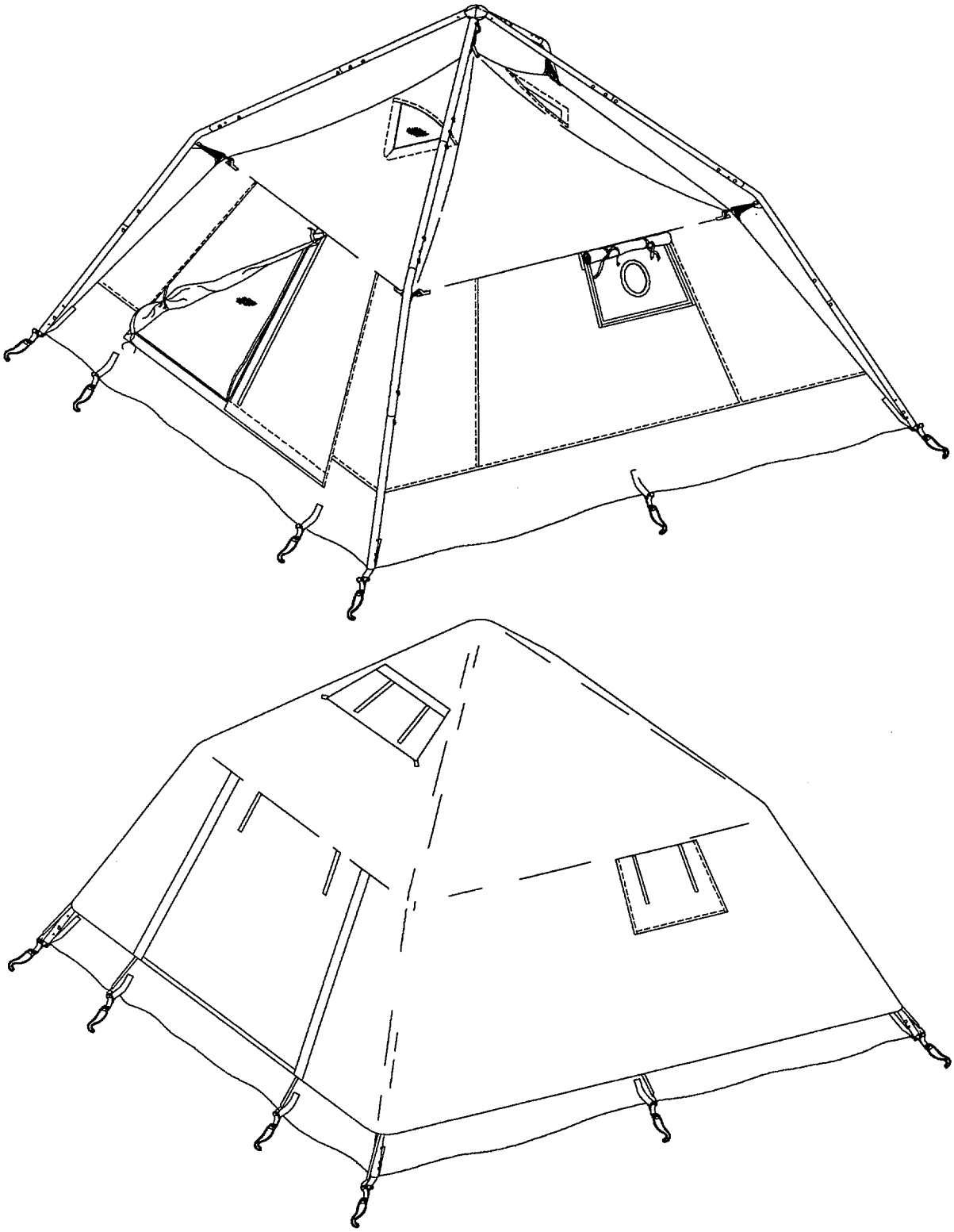

Five Soldier Crew Tent (FSCT)

CHAPTER 1

INTRODUCTION

Subject	Section/Paragraph
General Information	I
Scope	1-1
Maintenance Forms and Records	1-2
Destruction of Material to Prevent Enemy Use	1-3
Preparation for Storage or Shipment	1-4
Quality Assurance	1-5
Nomenclature Cross-Reference	1-6
Reporting Equipment Improvement Recommendations	1-7
Corrosion Prevention and Control	1-8
Warranty Information	1-9
List of Abbreviations and Terms	1-10
Equipment Description	II
Equipment Characteristics, Capabilities and Features	1-11
Location and Description of Major Components	1-12
Differences Between Models	1-13
Equipment Data	1-14
Technical Principles of Operation	III
Operation of the FSCT	1-15

SECTION I. GENERAL INFORMATION

1-1. SCOPE.

a. Type of Manual. Operator's, Unit, and Direct Support Maintenance Manual that provides instructions for the set-up, operation, take down, maintenance, repair parts and procedures for all components of the Five Soldier Crew Tent (FSCT).

b. Purpose of Equipment. Provide environmental protection and shelter to crew member personnel.

c. Special Features. Lightweight tent and frame assembly can be easily set up by one or two soldiers.

d. Model Number and Equipment Name. There is no model number for the FSCT. Table 1-1 lists the various tent configurations and nomenclatures.

1-2. MAINTENANCE FORMS AND RECORDS. Department of the Army forms and procedures used for equipment maintenance will be those prescribed by DA PAM 738-750, The Army Maintenance Management System (TAMMS).

1-3. DESTRUCTION OF ARMY MATERIEL TO PREVENT ENEMY USE. Destruction procedures for FSCT components cover-I in this manual are described in TM 750-244-3.

1-4. PREPARATION FOR STORAGE OR SHIPMENT. Refer to paragraph 2-8 to prepare the FSCT for storage or shipment.

1-5. QUALITY ASSURANCE (QA). All maintenance actions will be inspected to assure that all applicable quality assurance standards are met. Refer to FM 10-16 for fabric repair standards.

1-6. NOMENCLATURE CROSS-REFERENCE.

COMMON NAME	OFFICIAL NAME
Frame	Frame Assembly
FSCT	Five Soldier Crew Tent
Tent	Five Soldier Crew Tent

1-7. REPORTING EQUIPMENT IMPROVEMENT RECOMMENDATIONS (EIR). If your FSCT components need improvement, let us know. Send us an EIR. You, the user, are the only one who can tell us what you don't like about your equipment. Let us know why you don't like the design or performance. Put it on an SF 368 (Quality Deficiency Report). Mail it to us at: Commander, U.S. Army Aviation and Troop Command, ATTN: AMSAT-I-MDO, 4300 Goodfellow Blvd., St. Louis, MO 63120-1798. We'll send you a reply.

1-8. CORROSION PREVENTION AND CONTROL (CPC). Corrosion Prevention and Control (CPC) of Army materiel is a continuing concern. It is important that any corrosion problems with this item be reported so that the problem can be corrected and improvements made to prevent the problem in future items. While corrosion is typically associated with rusting of metals, it can also include deterioration of other materials, such as rubber and plastic. Unusual cracking, softening, swelling, or breaking of the materials may be corrosion problems. If a corrosion problem is identified, it can be reported using Standard Form 386, Product Quality Deficiency Report. Use key words such as "rust", "deterioration". "corrosion", or "cracking" to insure that the information is identified as a CPC problem. The form should be submitted to: Commander, U.S. Army Aviation and Troop Command, ATTN: AMSAT-I-MDO, 4300 Goodfellow Blvd., St. Louis, MO 63120-1798.

1-9. WARRANTY INFORMATION. The FSCT is warranted by the manufacturer. The warranty starts on the date found on DA Form 2410 or DA Form 2408-16 in the Logbook. Report all defects in material or workmanship to your supervisor, who will take appropriate action.

1-10. LIST OF ABBREVIATIONS AND TERMS.

CPC	Corrosion Prevention and Control
EIR	Equipment Improvement Report
ESC	Equipment Serviceability Criteria
FSCT	Five Soldier Crew Tent
MWO	Modification Work Order
U/M	Unit of Measure
UOC	Usable On Code

SECTION II. EQUIPMENT DESCRIPTION

1-11. EQUIPMENT CHARACTERISTICS, CAPABILITIES AND FEATURES. The Type I FSCT comes in green, with a reversible green/tan fly. The Type II FSCT comes in green, with a reversible green/white fly. In addition, the Type II FSCT comes with a cold weather liner. Except for fly color and the liner, the characteristics, capabilities and features of both tents are identical.

a. Characteristics.

- Usable in a variety of climates.
- Constructed of lightweight materials.
- Deployed in forward battle areas.

b. Capabilities and Features.

- Can be set up quickly by one or two soldiers.
- Frame assembly consists of aluminum poles that unfold and are connected by shock cord.
- FSCT is made of water resistant, flame resistant, lightweight, polyester fabric.
- Can be heated by a portable, internal source.
- Constructed with tear and weather resistant, reinforced floor.

1-12. LOCATION AND DESCRIPTION OF MAJOR COMPONENTS.

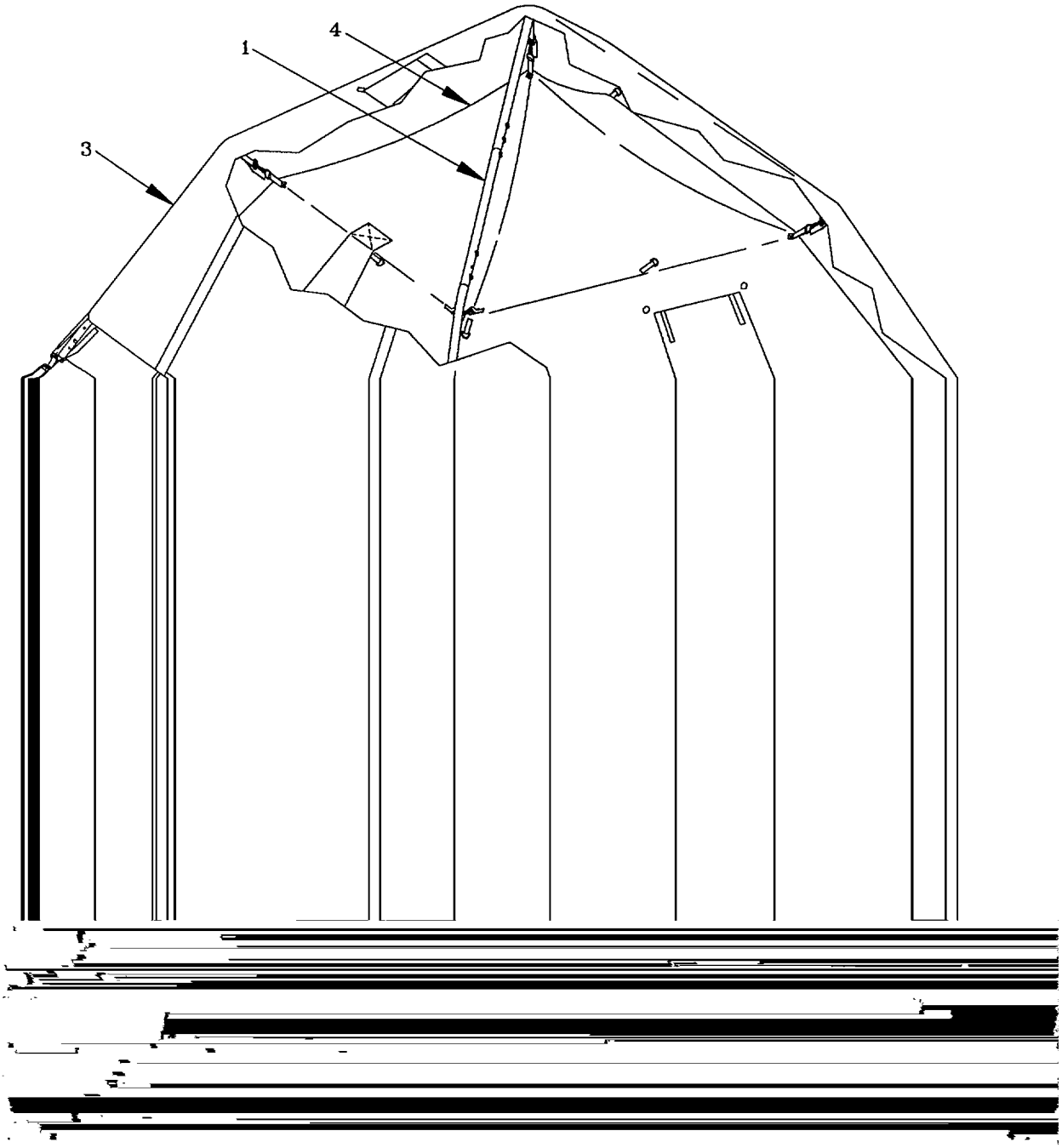

Figure 1-1. Major Components of the FSCT

a. Frame Assembly. The frame assembly (1) consists of four aluminum poles that, when erected, are joined at a center hub. The assembled frame is an external frame from which the tent body is suspended and over which the fly is positioned.

b. Tent Body Assembly. The body assembly (2) is suspended from the frame assembly. The body contains a front door, a window, a stovepipe opening, and an emergency exit hatch. The tent floor is part of the tent body assembly. A gear loft assembly provides overhead storage.

c. Fly Assembly. The fly assembly (3) is made from lightweight, reversible, coated cloth and covers the frame and tent body assemblies. Openings in the fly assembly match those in the tent body assembly. The fly issued with the Type I FSCT is Green/Tan; the fly issued with the Type II FSCT is Green/White.

d. Liner Assembly. The liner assembly (4) is issued with the Type II FSCT only. Made from flame resistant cotton oxford cloth, it is suspended from the interior of the tent body. The liner assembly has openings which match those in the tent body.

e. Cover Assembly. The cover assembly (5) is made from waterproof polyester or nylon coated cloth and is octagonal in shape, with two sets of straps.

1-13. DIFFERENCES BETWEEN MODELS. Table 1-1 lists the major differences between the Type I and Type II Five Soldier Crew Tents.

Table 1-1. Differences Between Models

	Type I	Type II
Frame Assembly, FSCT	x	x
Tent Body Assembly	x	x
Fly Assembly, FSCT Type I (Green/Tan)	x	
Fly Assembly, FSCT Type II (Green/White)		x
Liner Assembly, FSCT		x
Cover Assembly, Tent	x	x
Repair Kit	x	x
FSCT Pegs, Bag and Contents	x	x

1-14. EQUIPMENT DATA. Table 1-2 lists equipment data for the Five Soldier Crew Tent.

Table 1-2. FSCT Equipment Data

Total System Weight	75 lbs.
Packed Dimensions	15.5 in. x 15.5 in. x 36.5 in.
Total Square Feet Deployed	132 sq. ft. (11 ft. x 11 ft.)
Height at Eave	42 in.
Height at Center	70 in.

SECTION III. TECHNICAL PRINCIPLES OF OPERATION

1-15. OPERATION OF THE FSCT.

The Five Soldier Crew Tent (FSCT) is easily erected by one or two soldiers. The tent body assembly is laid out first. The legs of the frame are then inserted into the hub and extended. The frame is positioned over the tent and the center of the tent roof is attached to the frame. The legs of the frame are secured to the tent corners, then the eaves and sides of the tent are attached to the frame. The sides of the tent are staked down. If desired, the tent fly is installed over the pitched tent and frame, providing an extra layer of weather and camouflage protection. The liner may be installed in Type II tents as necessary.

CHAPTER 2

OPERATING INSTRUCTIONS

Subject	Section/Paragraph
Description and Use of Operator's Controls and Indicators	I
Operator's Controls and Indicators	2-1
Operator's Preventive Maintenance Checks and Services	II
Introduction	2-2
Operation under Usual Conditions	III
Assembly and Preparation for Use	2-3
Unpacking and Inspection.	2-4
Assembly and Installation Instructions	2-5
Operation of Doors and Windows	2-6
Decals and Instruction Plates	2-7
Preparation for Movement	2-8
Operation under Unusual Conditions	IV
General	2-9

SECTION I. DESCRIPTION AND USE OF OPERATOR'S CONTROLS AND INDICATORS

2-1. OPERATOR'S CONTROLS AND INDICATORS. There are no controls or indicators applicable to this equipment.

SECTION II. OPERATOR'S PREVENTIVE MAINTENANCE CHECKS AND SERVICES (PMCS)

2-2. INTRODUCTION. FSCT components must be inspected regularly to find and correct defects. Record all defects found during the performance of PMCS and the steps taken to correct them on a DA Form 2404, Equipment Inspection and Maintenance Worksheet. Instructions for reporting/correcting noted deficiencies are contained in DA PAM 738-750

a. *General*. Table 2-1 (PMCS Table) has been provided so you can keep your equipment in good operating condition and ready for its primary mission.

(1) Before you operate. Always keep in mind the CAUTIONS and WARNINGS. Perform your before (B) PMCS prior to the equipment leaving its containment area or performing its intended mission.

(2) While you operate. Always keep in mind the CAUTIONS and WARNINGS. Perform your DURING (D) PMCS when the equipment is being used in its intended mission.

(3) After you operate. Be sure to perform your after (A) PMCS after the equipment has been taken out of its mission mode or returned to its containment area.

2-2. INTRODUCTION - Cont'd.

(4) If your equipment fails to operate. Troubleshoot with proper equipment. Report any deficiencies using the proper forms. See DA Pam 738-750.

b. *Warnings and Cautions*. Always observe the WARNINGS and CAUTIONS appearing in your PMCS table. Warnings and cautions appear before applicable procedures. You must observe these WARNINGS and CAUTIONS to prevent serious injury to yourself and others or prevent your equipment from being damaged.

c. *Explanation of table entries*.

(1) *Item number column*. Numbers in this column are for reference. When completing DA Form 2404 (Equipment Inspection and Maintenance Worksheet), include the item number for the check/service indicating a fault. Item numbers also appear in the order that you must do checks and services for the intervals listed.

(2) *Interval column*. This column tells you when you must do the procedure in the procedure column. BEFORE procedures must be done before you operate or use the equipment for its intended mission. DURING procedures must be done during the time you are operating or using the equipment for its intended mission. AFTER procedures must be done immediately after you have operated or used the equipment.

(3) *Location, check/service column*. This column provides the location and the item to be checked or serviced. The item location is underlined.

(4) *Procedure column*. This column gives the procedure you must do to check or service the item listed in the Check/Service column to know if the equipment is ready or available for its intended mission or for operation. You must perform the procedure at the time stated in the interval column.

(5) *Not fully mission capable if column*. Information in this column tells you what faults will keep your equipment from being capable of performing its primary mission. If you make check and service procedures that show faults listed in this column, do not operate the equipment. Follow standard operating procedures for maintaining the equipment or reporting equipment failure.

d. *Other table entries*. Be sure to observe all special information and notes that appear in your table.

Table 2-2. Operator Preventive Maintenance Checks and Services for Five Soldier Crew Tent

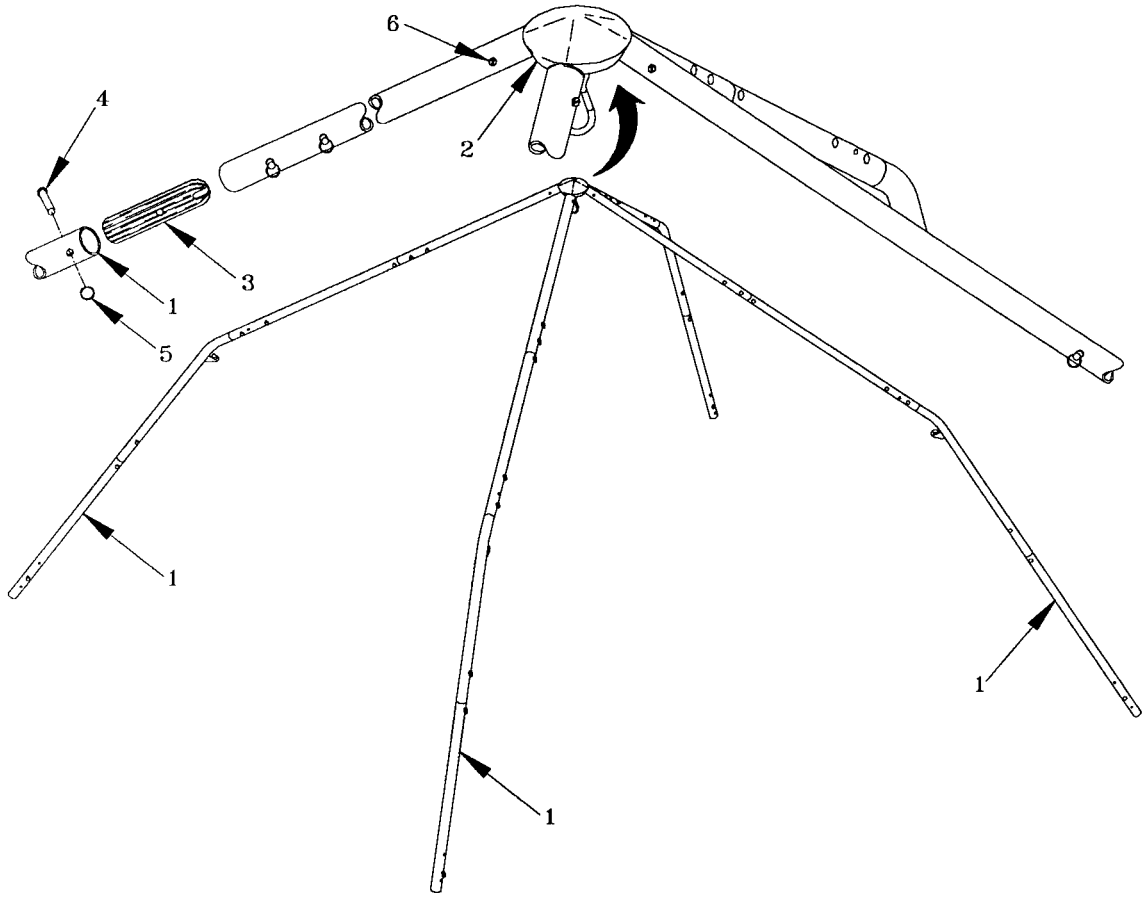

Item No	Interval B	Interval D	Interval A	Item to be Inspected	Procedures Check for & have repaired or adjusted as necessary	Equipt is Not Ready/ Available If:
1				Frame Assy		
	•	•	•	Poles, Hub Assy	Check that poles (1) operate properly and fit securely into hub assembly (2).	Frame cannot be erected or support tent.
	•	•	•	Hardware	Check that frame joint sleeves (3), frame pins (4), split rings (5), and screws (6) are not damaged or missing. Replace damaged or missing components. (Refer to para 3-6.)	Hardware components damaged or missing.

Table 2-2. Operator Preventive Maintenance Checks and Services for Five Soldier Crew Tent

Item No	Interval			Item to be Inspected	Procedures Check for & have repaired or adjusted as necessary	Equipt is Not Ready/ Available If:
	B	D	A			
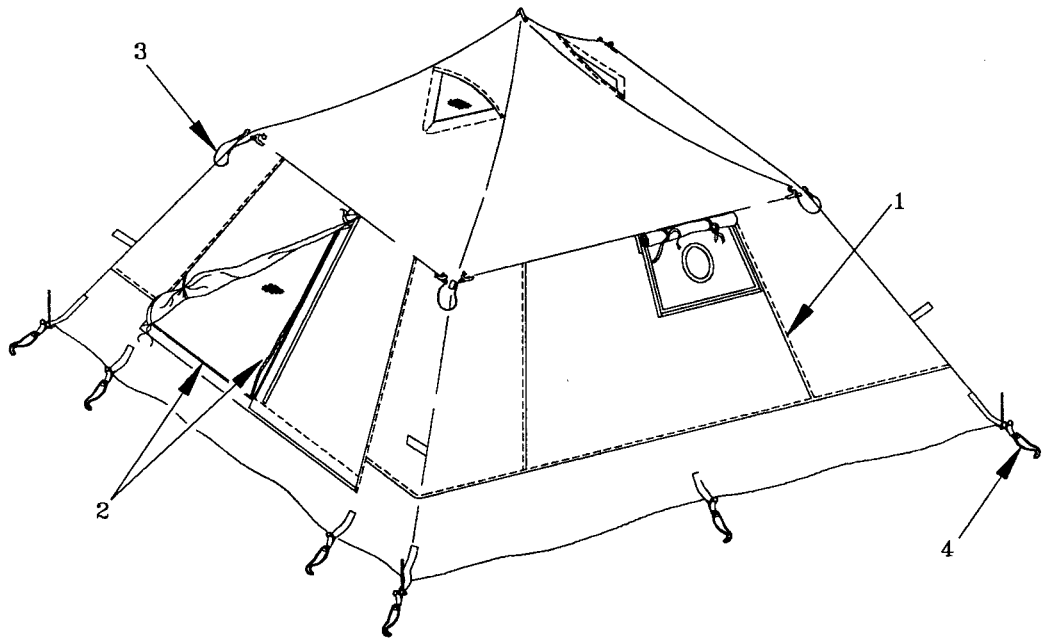						
2				<u>Tent Body Assy</u>		
	•	•	•	Fabric	Check for tears, punctures, separated seams (1). Repair as necessary. (Refer to para. 3-7)	Tent leaks or cannot be secured to frame.
	•	•	•	Zippers	Check that zippers (2) operate smoothly. Lubricate as necessary.	Zippers do not operate properly.
	•	•	•	Cord, Rope	Check for missing, damaged cord (3), rope (4). Replace as necessary. (Refer to para. 3-7)	Cord, rope damaged or missing.
	•	•	•	Hook & Pile Fasteners	Check for damaged or dirty hook & pile fasteners. Repair as necessarv. para. 3-7	Fastener tape missing.
	•	•	•	Hardware	Check for damaged or missing grommets, dee rings, snap hooks. (Refer to para. 3-7)	Hardware missing.

Table 2-2. Operator Preventive Maintenance Checks and Services for Five Soldier Crew Tent

Item No	Interval			Item to be Inspected	Procedures Check for & have repaired or adjusted as necessary	Equipt is Not Ready/ Available If:
	B	D	A			
				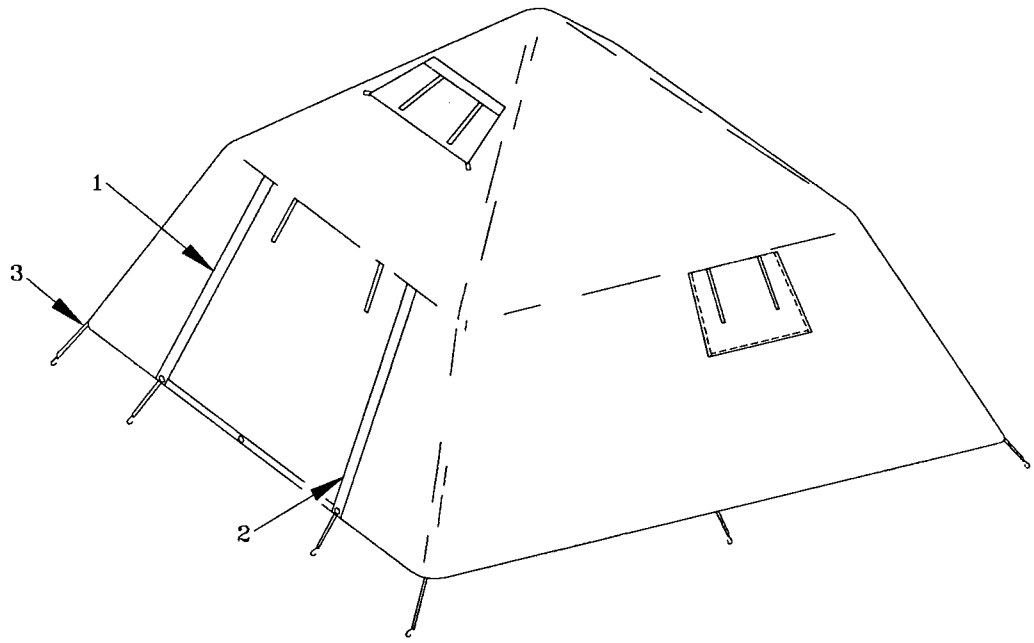		
3				Fly Assemby		
	•	•	•	Fabric	Check for tears, punctures, separated seams (1). Repair as necessary. (Refer to **Para 3-7**)	Tent leaks or cannot be secured to frame.
	•	•	•	Zippers	Check that zippers (2) operate smoothly. Lubricate as necessary.	Zippers do not operate properly.
	•	•	•	Cord	Check for missing, damaged cord (3). Replace as necessarv. (Refer to **Para 3-7**)	Cord, rope damaged or missing.
	•	•	•	Hook & Pile Fasteners	Check for damaged or dirty hook & pile fasteners. Repair as necessarv. (Refer to **Para 3-7**	Fastener tape missing.
	•	•	•	Hardware	Check for damaged or missing grommets, snap hooks. (Refer to **Para 3-7**	Hardware missing.

Table 2-2. Operator Preventive Maintenance Checks and Services for Five Soldier Crew Tent

Item No	Interval			Item to be Inspected	Procedures Check for & have repaired or adjusted as necessary	Equipt is Not Ready/ Available If:
	B	D	A			
				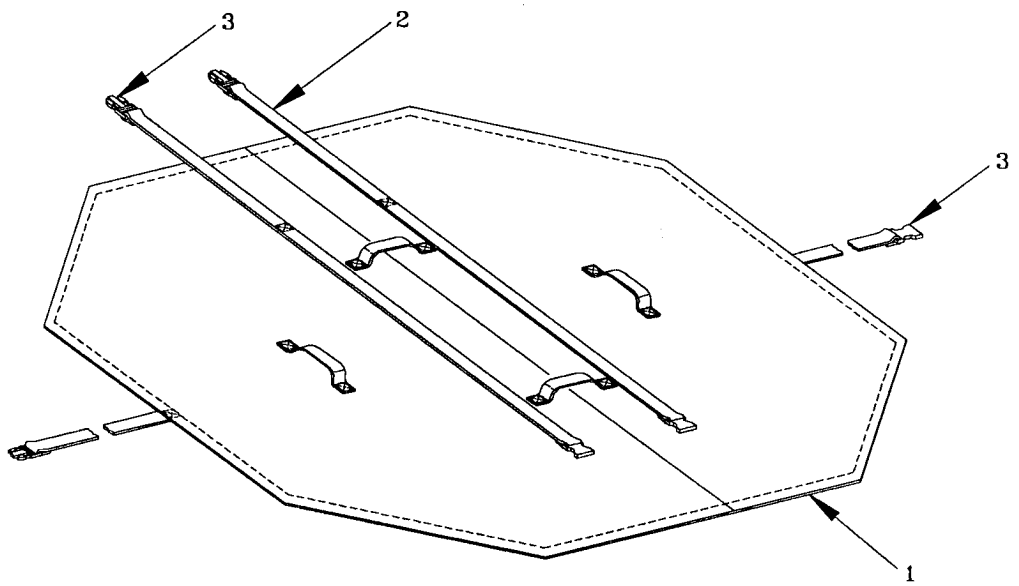		
4				Cover Assemby		
	•		•	Fabric	Check fabric (1) for tears,punctures,separated seams. Repair as necessary. (Refer to Para 3-7)	Cover cannot protect FSCT components.
	•		•	Webbing	Check webbing (2) for damage or separation from cover fabric. Repair as necessary. (Refer to Para 3-7)	Cover cannot be secured.
	•		•	Hardware	Check for missing fasteners (3). Replace as necessary. (Refer to Para 3-7)	Cover cannot be secured.

Table 2-2. Operator Preventive Maintenance Checks and Services for Five Soldier Crew Tent

Item No	Interval			Item to be Inspected	Procedures Check for & have repaired or adjusted as necessary	Equipt is Not Ready/ Available If:
	B	D	A			
				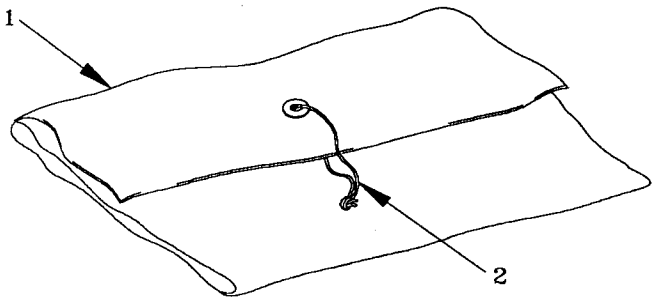 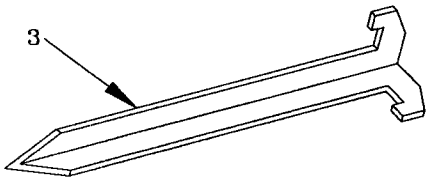		
5				<u>Pegs, Bag</u>		
	•		•	Fabric	Check fabric (1) for tears,punctures,separated seams. Repair as necessary. (Refer to **Para 3-7**)	Bag cannot hold pins.
	•		•	Cord	Check for missing,damaged cord (2). Replace as necessary. (Refer to **Para 3-7**)	
	•		•	Pins	Check for missing or damaged pins (3). Replace as necessary.	FSCT cannot be secured.

Table 2-2. Operator Preventive Maintenance Checks and Services for Five Soldier Crew Tent

Item No	Interval			Item to be Inspected	Procedures Check for & have repaired or adjusted as necessary	Equipt is Not Ready/ Available If:
	B	D	A			
				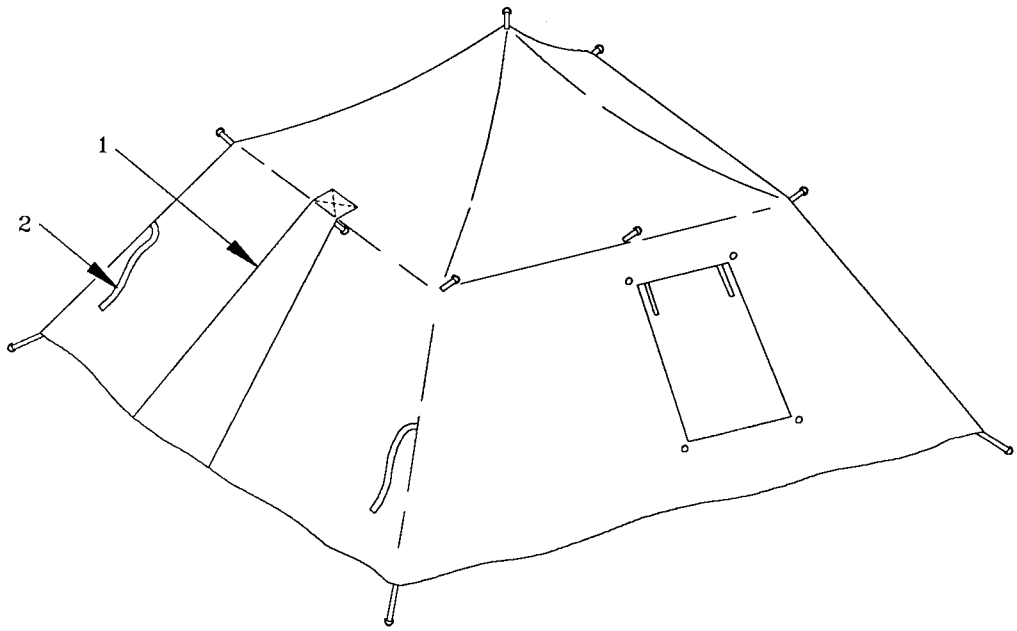		
6				Liner Assembly (Type II FSCT)		
	•	•	•	Fabric	Check for tears, punctures, separated seams (1). Repair as necessary. (Refer to **Para 3-7** .)	Liner cannot be secured to tent body.
	•	•	•	Hook & Pile Fasteners	Check for damaged or dirty hook & pile fasteners (2). Repair as nec- essary. (Refer to **Para 3-7**)	Fastener tape missing.
	•	•	•	Hardware	Check for damaged or missing dee rings, snap hooks, grommets. Replace as necessary. (Refer to **Para 3-7**)	Liner cannot be secured to tent body.

SECTION III. OPERATION UNDER USUAL CONDITIONS

2-3. ASSEMBLY AND PREPARATION FOR USE. This section provides detailed instructions for setting up the Five Soldier Crew Tent.

2-4. UNPACKING AND INSPECTION. Unpack crates/transport bags and visually inspect their contents. Make sure that everything is there, including end items and basic issue items, as listed in Appendix D. Also refer to Table 2-1, Operator PMCS, for inspection procedures.

2-5. ASSEMBLY AND INSTALLATION INSTRUCTIONS. To assemble the FSCT proceed as follows:

a. *Site Selection*. When selecting a site on which to set up the FSCT:

(1) Select a level area.

(2) If possible, the area should be sheltered from high winds.

(3) Clear area of all rocks and underbrush.

(4) If necessary, dig a drainage ditch around the tent site.

b. Pitching the Tent.

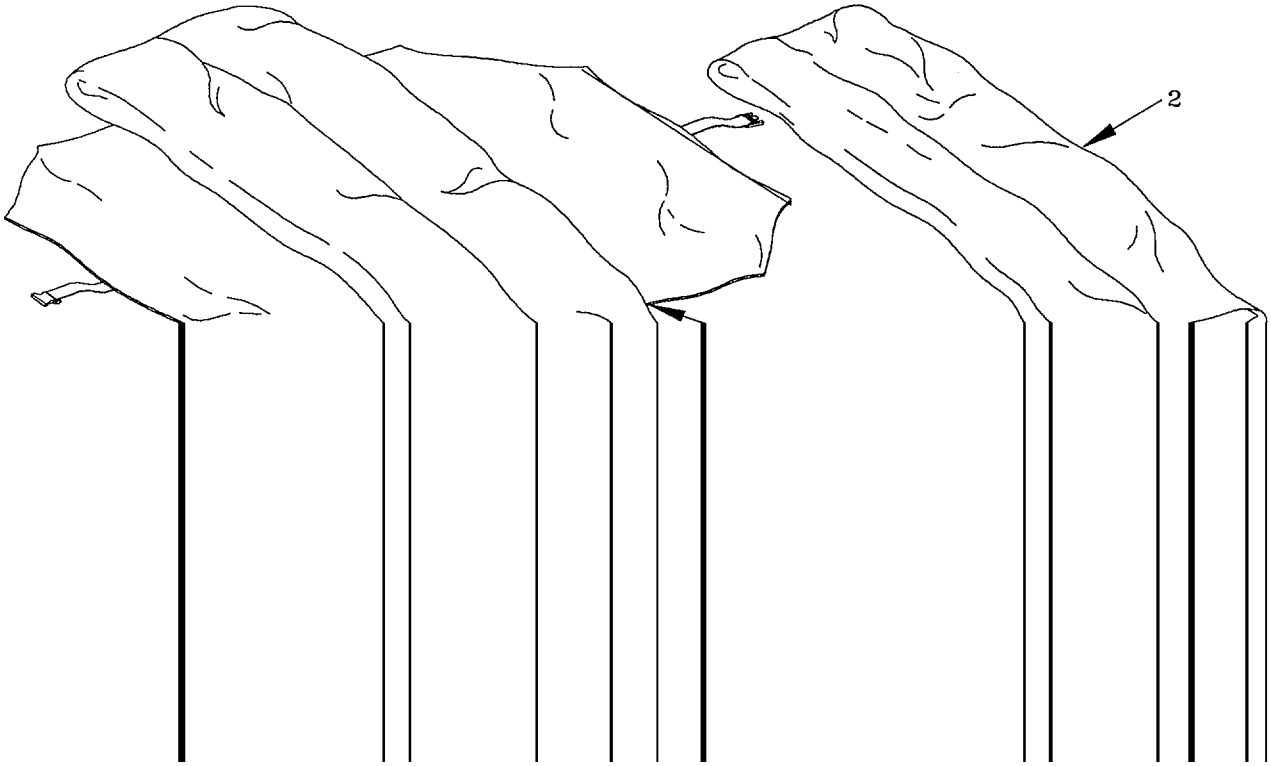

2-5. ASSEMBLY AND INSTALLATION INSTRUCTIONS - Cont'd.

WARNING

SUFFOCATION HAZARD. FSCT fabric does not "breathe". Open windows and flaps as necessary to ensure adequate ventilation. If all openings are closed, it is possible to use up all of the oxygen contained in the tent, especially during sleeping hours, RESULTING IN DEATH.

NOTE

A team of two soldiers is recommended to work through the following procedures to speed pitching, striking, and packing. However, one soldier can perform all functions if necessary.

If pitching in windy conditions, move tent to desired location and stake corners. (See tent staking instructions in paragraph 2-6.d.)

(1) Open and unroll tent cover assembly (1). Remove fly (2), gear loft (3), tent frame assembly (4), and tent pin bag (5) and set aside.

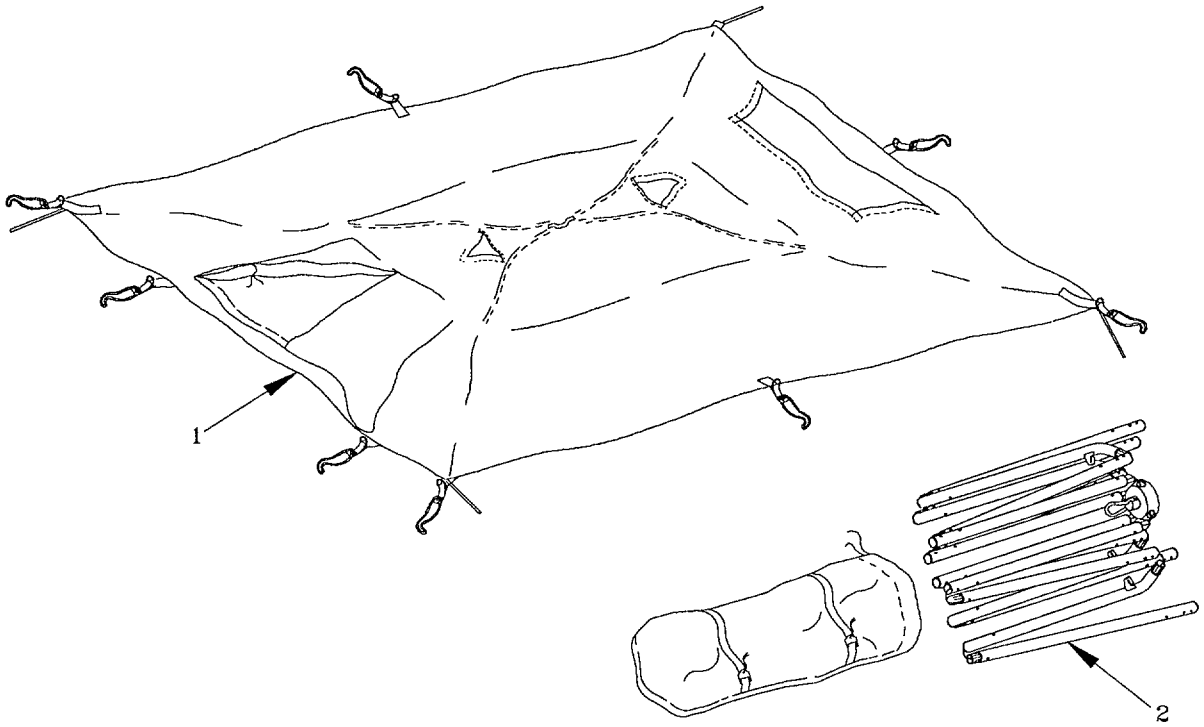

2-5. ASSEMBLY AND INSTALLATION INSTRUCTIONS - Cont'd.

(2) Spread tent body assembly (1) on ground, free from sharp objects. Locate and open front door, if closed.

(3) Remove frame assembly (2) from its bag.

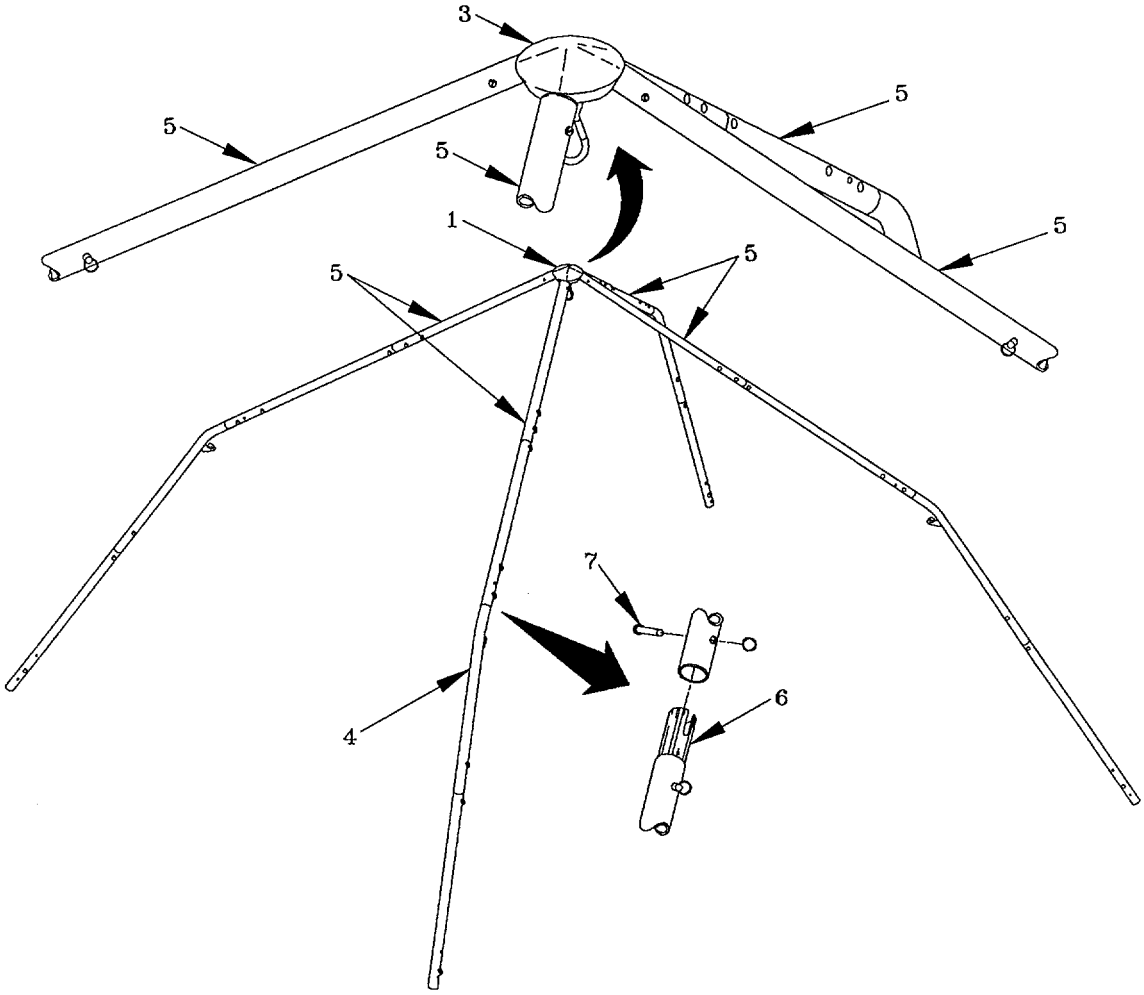

WARNING

Frame members are spring loaded and could pinch fingers. In performing steps 4,5, and 6 keep hands clear of pole joints. Personal injury could result.

(4) Locate center hub (3) on frame assembly (4) and insert four top leg sections (5) into hub. (Flat side of insert faces up.)

(5) Extend remaining sections of each leg, making sure they are securely seated. (Slots in frame joint sleeves (6) fit over frame pins (7) to help align legs.)

2-5. ASSEMBLY AND INSTALLATION INSTRUCTIONS - Cont'd.

CAUTION

To prevent damage to tent fabric, avoid dragging frame assembly over tent.

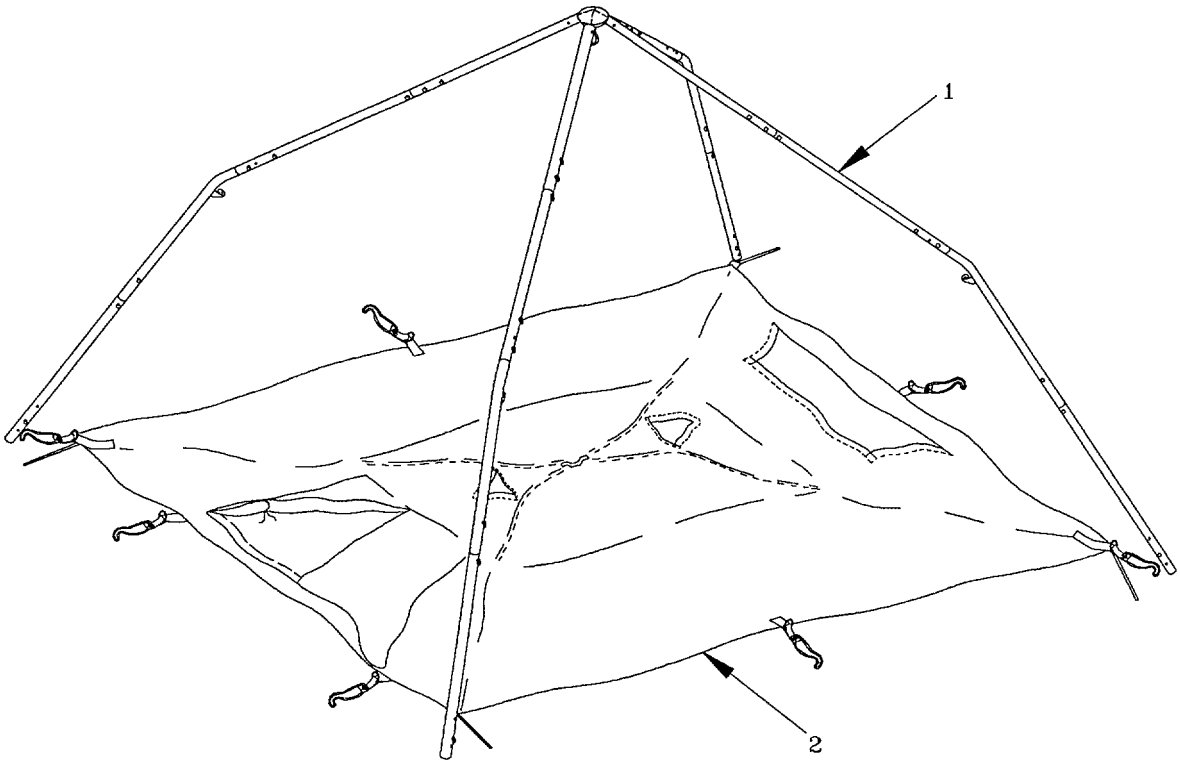

(6) Position assembled frame (1) over tent body assembly (2), with end sections of legs at tent corners.

2-5. ASSEMBLY AND INSTALLATION INSTRUCTIONS - Cont'd.

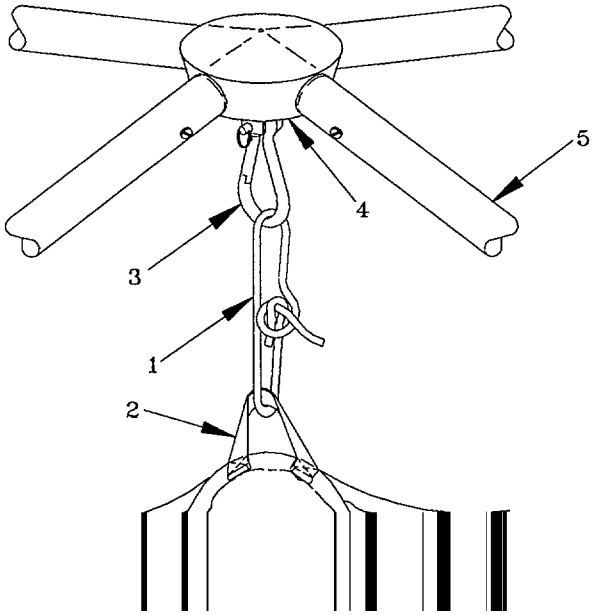

(7) Locate top center cord loop (1) attached to tent body assembly (2) and fasten to snap hook (3) hanging from center hub (4) of frame assembly (5).

2-5. ASSEMBLY AND INSTALLATION INSTRUCTIONS - Cont'd.

WARNING

Frame assembly will be under tension when inserting pins. Stand to side of frame assembly poles when performing the next step. Frame members could strike and injure you if they slip.

(8) Insert 5" triangular steel pin (1) attached to tent corner into bottom of frame pole (2). Insert diagonally opposite pin into bottom of corresponding pole. Repeat process at remaining corners.

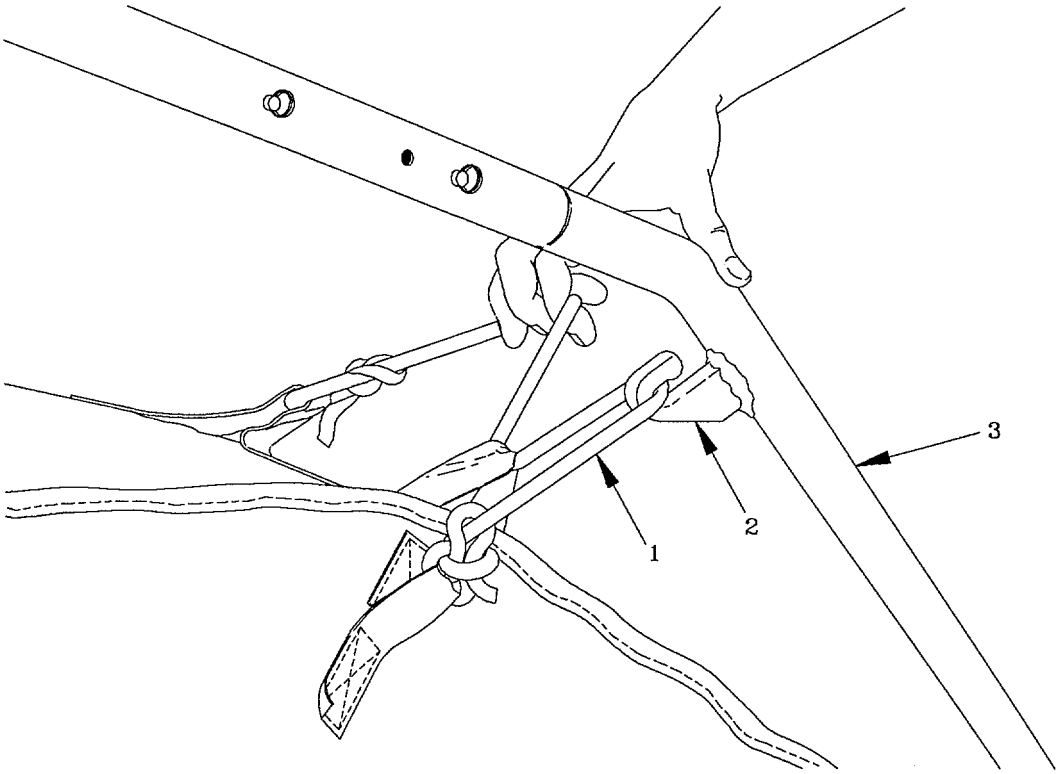

(9) Standing at one corner of the tent, attach one side of the cord loop (1) on the tent roof to the hook (2) on the tent frame assembly (3). After attaching the first side of the loop to the hook, grasp the second side of the loop and place over the hook. Repeat at remaining corners.

2-5. ASSEMBLY AND INSTALLATION INSTRUCTIONS - Cont'd.

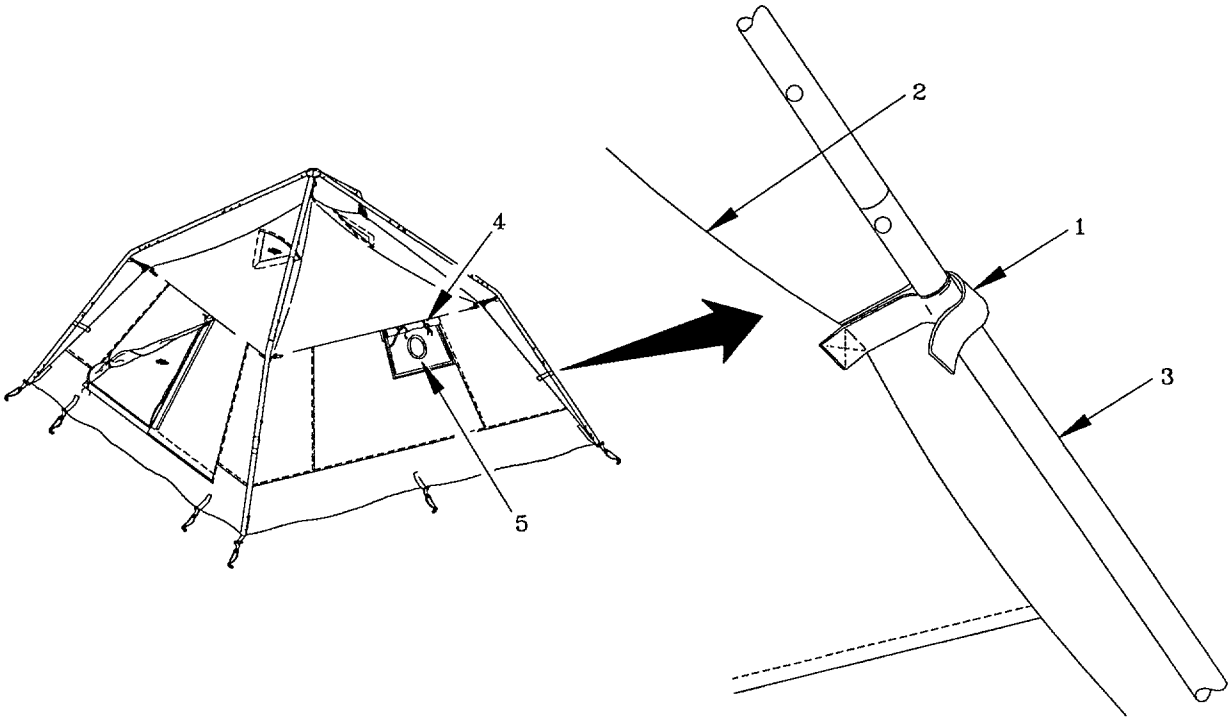

(10) Wrap hook and pile fasteners (1) on tent body assembly (2) around frame assembly (3). Leave 2"-3" distance between wall of tent and inside of frame. Check that door operates properly after attaching hook and pile fasteners. Adjust fasteners as necessary.

WARNING

FIRE HAZARD. When using the M-1949 (pot belly) or M-1951 (Yukon) stove inside the Five Soldier Crew Tent - always place the heater onto a metal sheet or inside a sandbox to reduce the possibility of a fuel spill on the tent floor. Such a fuel spill can degrade the fabric or create a fire hazard.

2-5. ASSEMBLY AND INSTALLATION INSTRUCTIONS - Cont'd.

(11) If a stove is to be used, open and securely roll up flap (4) on right side wall of tent, which will expose the stove pipe shield (5). Roll flap under so that it does not retain water. If stove is not to be used, secure flap to tape fastener around shield.

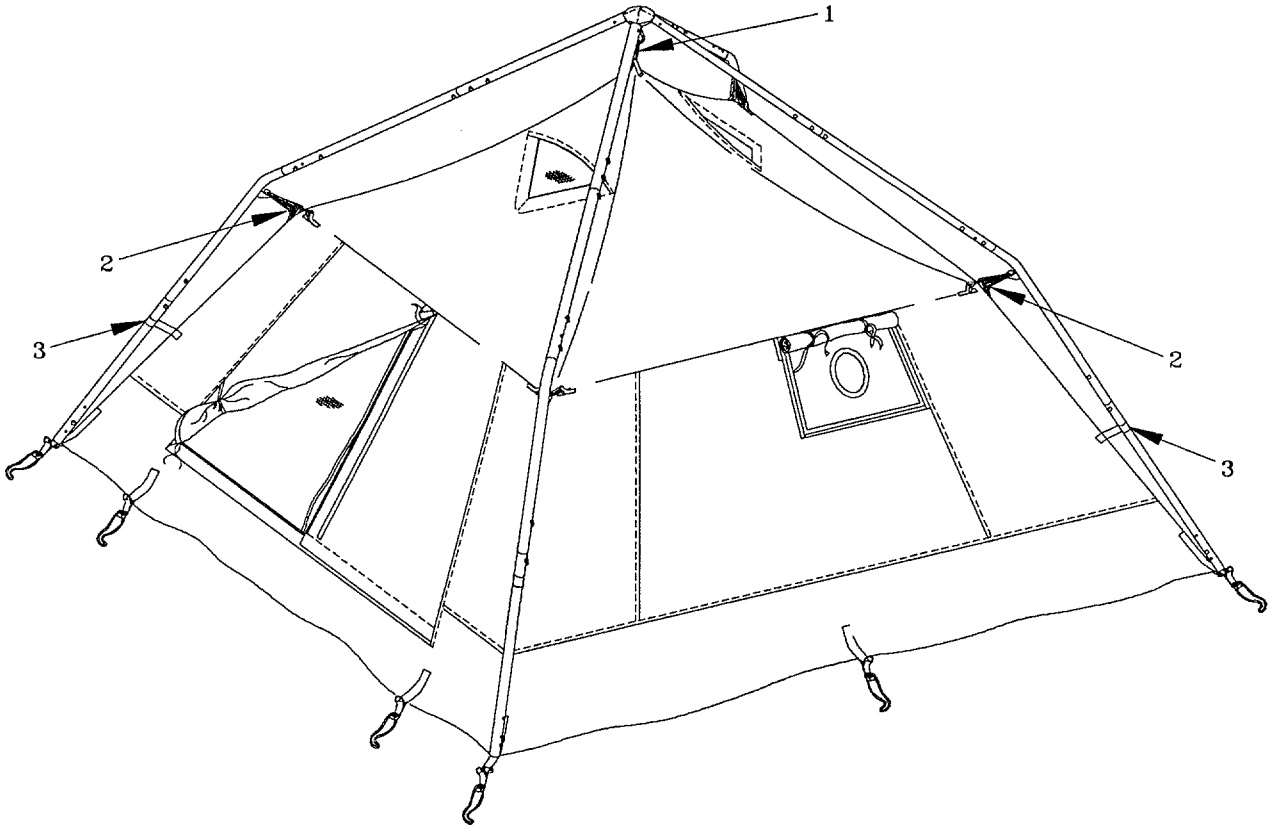

(12) Pitching of tent is complete. Adjust tension with top (1) and corner (2) cords and hook and pile fasteners (3).

2-5. ASSEMBLY AND INSTALLATION INSTRUCTIONS - Cont'd.

c. Pitching the Fly.

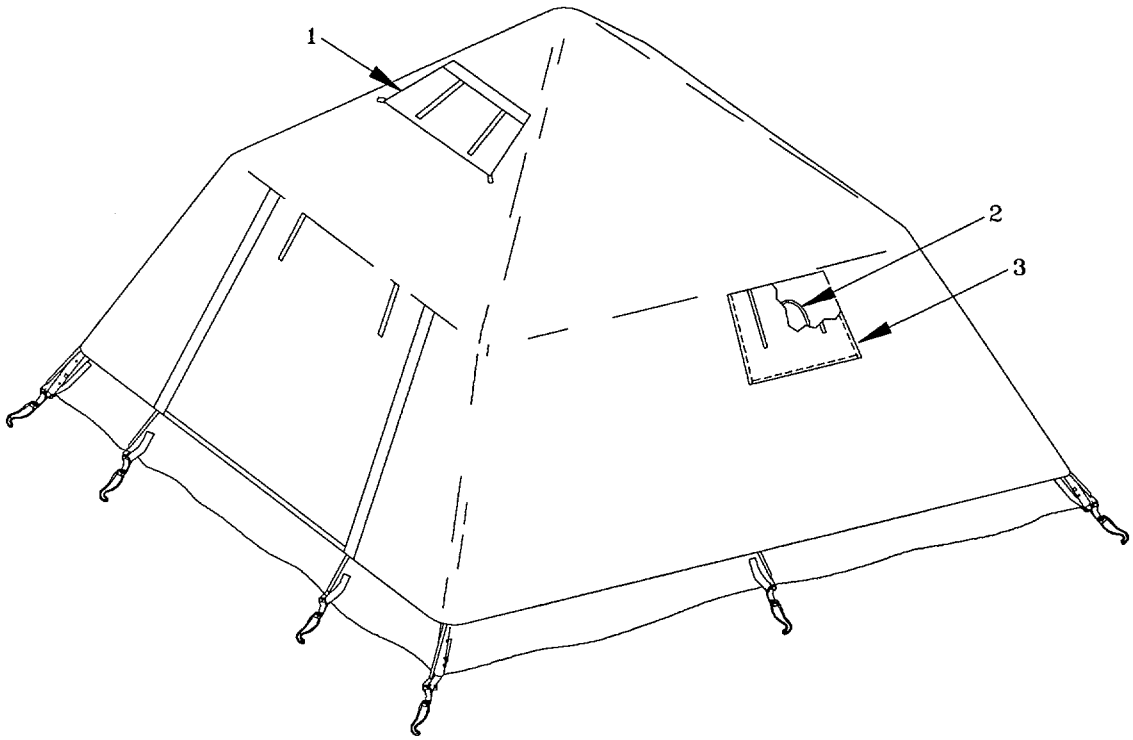

NOTE

Fly is reversible to provide camouflage protection.

(1) Position fly so that the side (green or camouflage) which is to be visible when the tent is erected faces down. Locate vent flaps (1) near center of fly. Open and securely fasten vent flaps on this side with tie tapes.

(2) Locate stove pipe shields (2). Locate stove pipe shield flap that will align with stove pipe shield on tent body when fly is turned to correct side. Open flap (3) and fasten securely with tie tapes.

(3) Turn fly to correct side and locate front of fly. (Front has zippered door.) Drape fly over pitched tent and frame, making sure front of fly lines up with door of tent.

2-5. ASSEMBLY AND INSTALLATION INSTRUCTIONS - Cont'd.

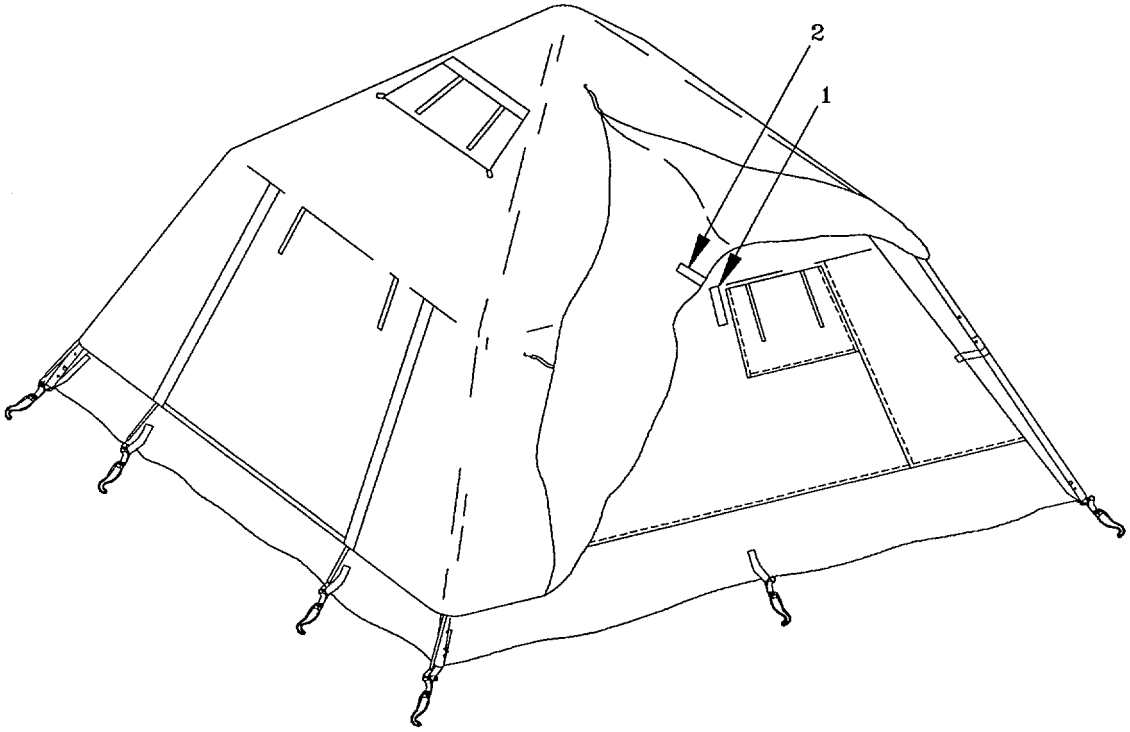

(4) Locate the 1" pile fasteners (1) at center of tent eaves and the 1" hook fasteners (2) at corresponding points on underside of fly and fasten.

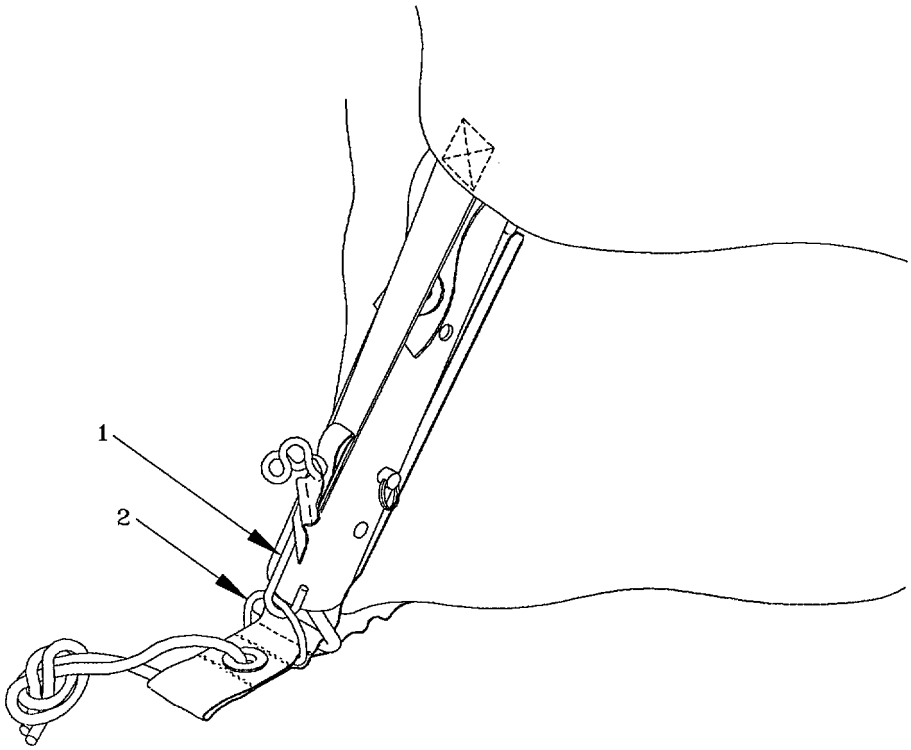

2-5. ASSEMBLY AND INSTALLATION INSTRUCTIONS - Cont'd.

(5) Secure adjustable hooks (1) on fly assembly to "D" rings (2) at corners of tent.

NOTE

Adjustable hooks may be attached to pole legs if "D" rings are damaged or missing.

(6) Adjust position and tension of fly by loosening or tightening webbing through adjustable hooks.

(7) Fasten adjustable hooks (1) to "D" rings (2) at center of each of three sides of tent. (Door side of fly has no hook.) Adjust tension of fly at these points.

NOTE

To use emergency hatch at rear of tent, peel tape fastener from top of liner, then from tent wall. Force out lower corners of fly opening and tent.

d. Staking the Tent.

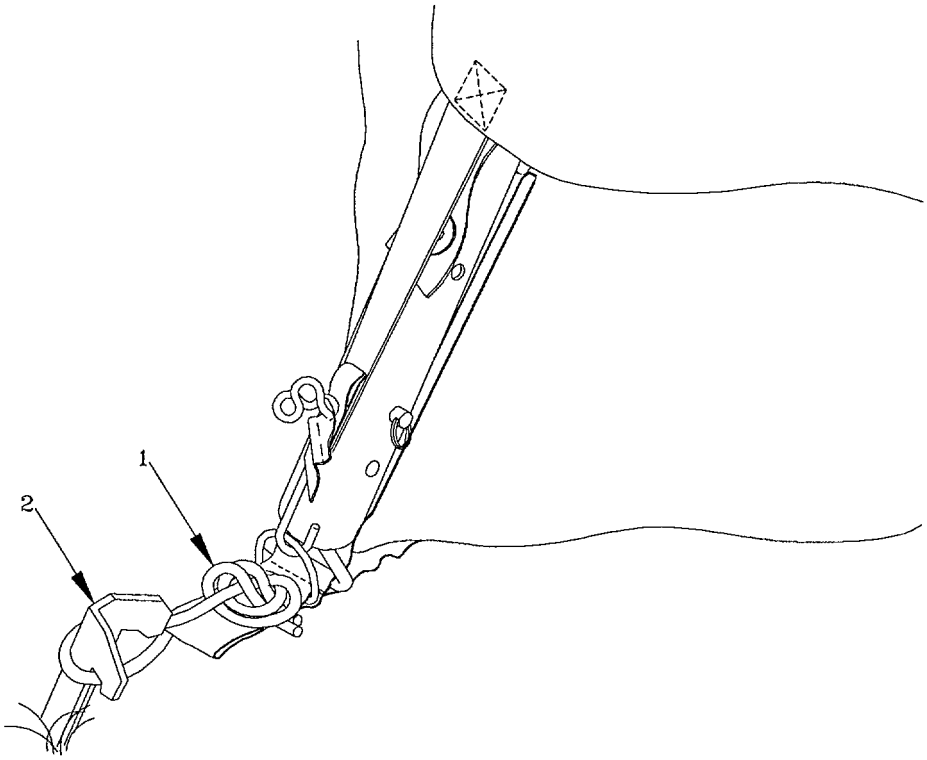

2-5. ASSEMBLY AND INSTALLATION INSTRUCTIONS - Cont'd.

(1) Stake corners of tent through rope beckets (1), using tent pins (2). Square and tension floor before driving tent pins at a 15 degree angle towards the tent. Repeat staking at center of tent sides.

NOTE

Front door flap of fly may be extended as an awning by tying a rope through each corner grommet and staking the opposite end at a 45 degree angle.

e. Installing Tent Liner (Type II FSCT Only).

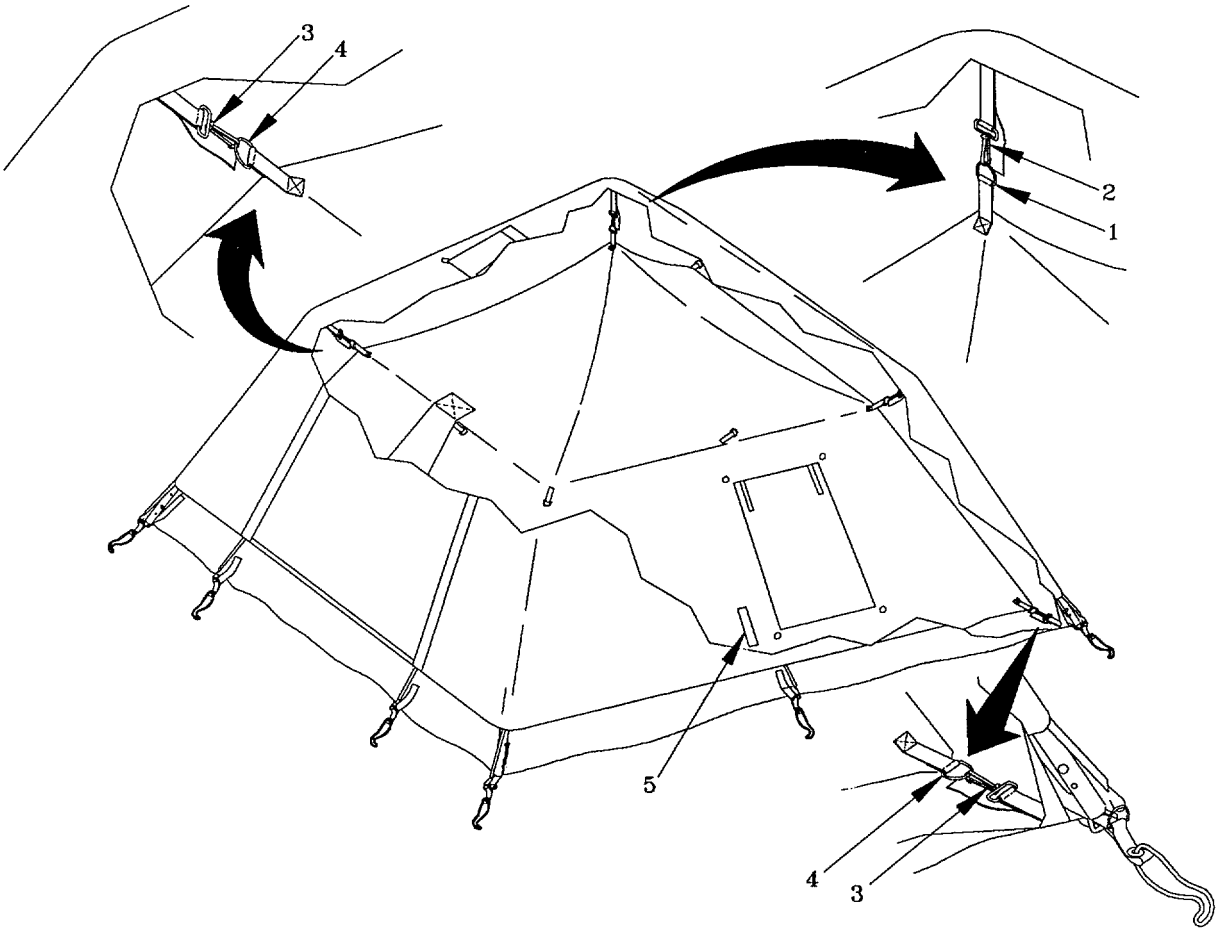

(1) Find top center of tent liner at point where "D" ring (1) is attached.

(2) Fasten "D" ring (1) to top center snap hook (2) inside tent, making sure that front door of liner is aligned with front door of tent.

2-5. ASSEMBLY AND INSTALLATION INSTRUCTIONS - Cont'd.

(3) Starting at rear of tent, fasten straps (3) inside tent eaves to rings (4) on outside of liner at eight locations.

(4) Fasten bottom of liner to bottom of tent at inside corner strap (3) and ring (4) locations.

(5) Secure tape fasteners (5) at center bottom of each wall to complete installation of liner. (There is no fastener at the front of the tent.)

f. Installing Gear Loft.

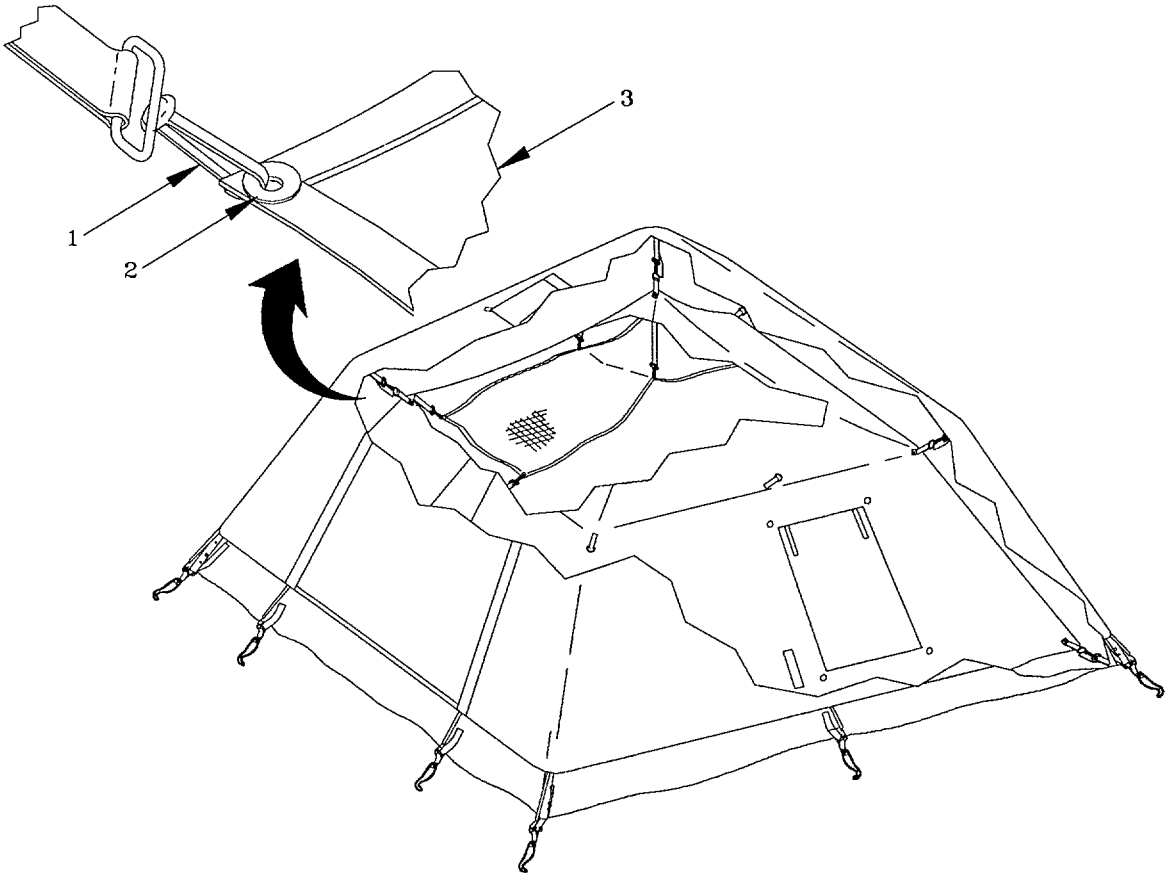

From inside the FSCT body or liner (if used), attach snap hooks (1) on side, front, back, and center of tent to grommets (2) on edges of gear loft (3).

2-6. OPERATION OF WINDOWS AND DOORS. The window openings have a window flap, screen and clear plastic window. The outside window flap may be rolled under and up toward the top of the tent and fastened using the fabric ties attached to the tent. Always roll the window flap under to prevent the collection of water, ice and snow on the flap. The clear window is held in place by hook and pile fastener strips and when open, hangs down on the inside of the FSCT.

2-7. DECALS AND INSTRUCTION PLATES. A label containing abbreviated setup instructions is sewn to the inside front wall of the tent body assembly. An identical label is sewn to the inside of the tent cover. An identification label is attached to the frame assembly.

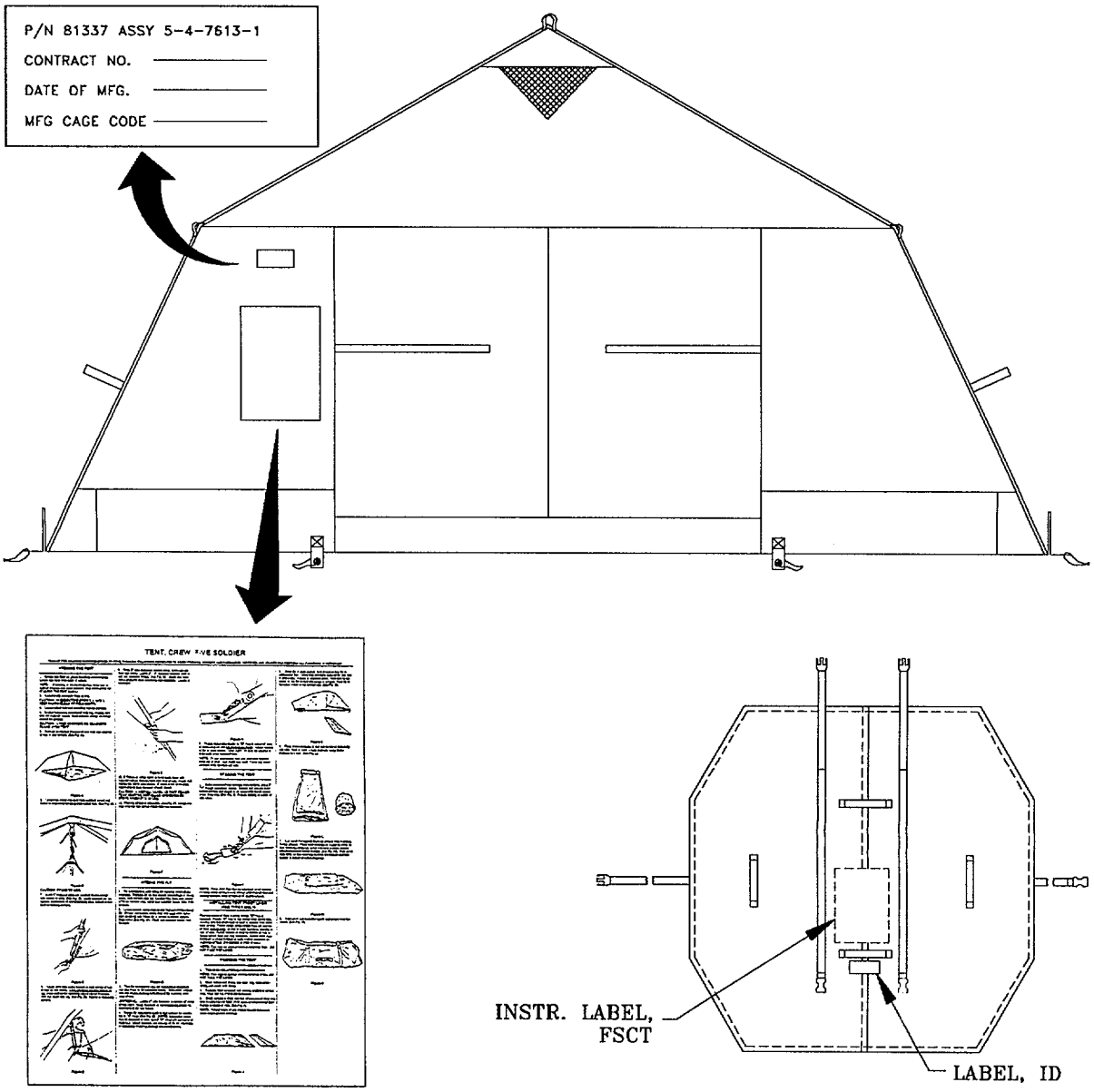

TENT, CREW, FIVE SOLDIER

TEAM OF TWO SOLDIERS IS RECOMMENDED TO WORK THROUGH FOLLOWING PROCEDURES TO SPEED PITCHING, STRIKING AND PACKAGING. HOWEVER, ONE SOLDIER CAN PERFORM ALL FUNCTIONS, IF NECESSARY.

PITCHING THE TENT

1. Spread tent floor on ground free from sharp objects. Locate and open front door, if closed.

NOTE: *If pitching in windy conditions, move tent to desired location and stake corners. (See instructions for STAKING THE TENT below.)*

2. . Remove tent assembly from its bag.

CAUTION: IN EXECUTING STEPS 3, 4 AND 5, KEEP HANDS CLEAR OF POLE JOINTS.

3. Locate center hub and insertfour top leg sections.

4. Extend remaining sections of each leg, making sure they are securely seated. Bent sections should be turned toward the ground.

CAUTION: AVOID DROPPING OR DRAGGING FRAME OVER TENT.

5. Position assembled frame over tent with end sections of legs at tent corners. (See Fig. A).

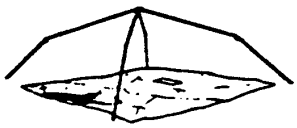

Figure A

6. Locate top center red cord loop attached to tent and fasten to snap hook hanging from center hub. (See Fig. B).

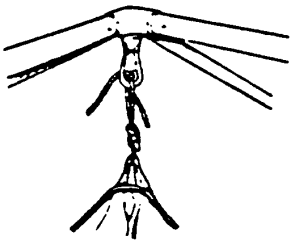

Figure B

CAUTION: STAND TO SIDE.

7. Insert 5" triangular steel pin attached to tent corner into bottom of pole. (See Fig. C). Insert opposite pin (diagonal) into bottom of corresponding pole. Repeat procedure at remaing corners.

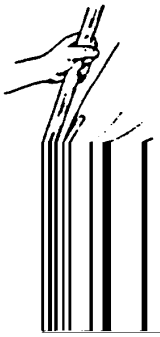

9. Wrap 2" tape fasteners around poles (between tent floor and eave). Leave 2" - 3" distance between wall of tent and inside of frame. (See Fig. E). Check that door closes properly after attaching tape fasteners. Loosen if necessary.

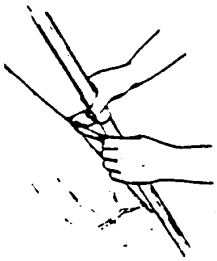

Figure E

10. If Yukon or other stove is to be used, open and securely roll up flap on right side wall of tent, which will expose the stove pipe shield. If stove is not to be used, secure flap to tape fastener around shield.

CAUTION: A METAL-, SAND-, OR DIRT-FILLED TRAY MUST BE INSTALLED UNDERNEATH STOVE WHEN IT IS IN USE.

11. Pitching of tent is complete. (See Fig. F). Adjust tension with top and corner ropes and tape fasteners.

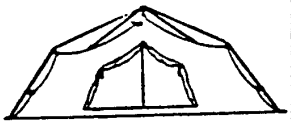

Figure F

PITCING THE FLY

1. Fly is reversible, providing for required camouflage condition. Position fly so that proper camouflage is facing down, with reverse side up. Locate vent flaps near center of fly on reverse side. Open and securely fasten flaps with tie tapes.

2. Locate proper stove pipe shield flap on reverse side of fly. (Proper stove pipe shield flap will align with stove pipe shield on tent when fly is turned to proper camouflage side.) (See Fig. G). Open and securely fasten with tie tapes.

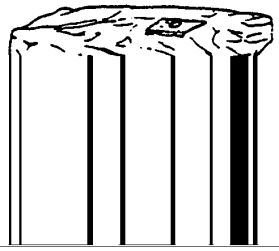

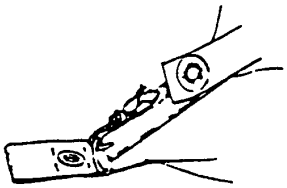

Figure H

5. Fasten adjustable hooks to "D" ring at center of each of three sides of tent (excluding the door). Adjust tension of fly at these points. After entry, fly may be secured at front door from inside of tent.

NOTE: *To use emergency rear exit pull tape fastener from top of liner, then front tent wall. Force out lower corners of fly opening and exit.*

STAKING THE TENT

1. Stake corners of tent through rope buckets, using 9" "V" trough aluminum stakes. Square and tension floor before driving tent stakes at an angle with top of stakes away from tent. (See Fig. I). Repeat staking at center of tent sides.

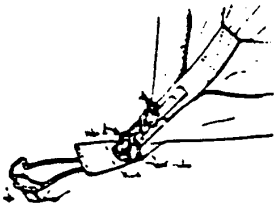

Figure I

NOTE: *Front door flap may be extended as an awning by tying ropes through each corner grommet on flap and staking opposite ends of rope at 45 degree angles.*

INSTALLING TENT FROST LINER (FOR TYPE II ONLY)

Find top center of liner at point where "D" ring is attached. Fasten "D" ring to top center snap inside tent, making sure that front door of liner is aligned with front door of tent. Fasten snaps inside tentto rings on outside of liner around eave of tent at eight locations, starting at rear of tent. Fasten bottom of liner to bottom of tent at inside corner snap and ring locations. Secure three tape fasteners at center bottom of each wall to complete installation of liner. (No fastener at front of tent.)

NOTE: *Tent may be pitched without removing liner. DO NOT PACK WET LINER.*

5. Grasp fly at each corner, fold in half so that fly is completely flat. Grasp one extended point of fly and fold to centerline. Repeat at opposite point. Fold roof to the center of the fly so that top edge is straight. Fold fly to the same width as the folded tent. (See Fig. K).

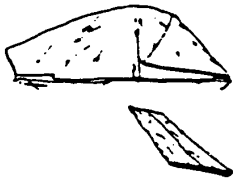

Figure K

6. Place frame package at end and on top of folded fly and tent. Roll to form a tight package, using frame package as a hub. (See Fig. L).

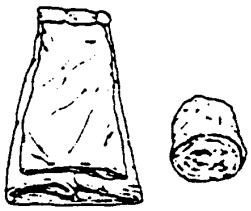

Figure L

7. Lay cover (wrapped) flatly on ground with webbing facing ground. Place rolld package in center of cover so that webbing straps on cover will form a circle around circumference of rolled package. (See Fig. M). Fold cover ends first, so that carrying handles are located approximately at center of rolled diameter.

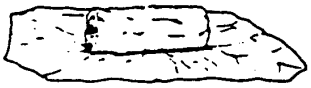

Figure M

8. Roll cover and contents tightly and secure with fasteners. (See Fig. N).

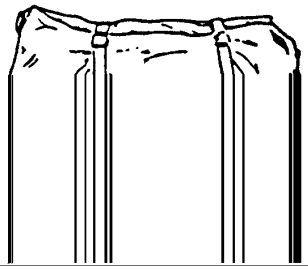

2-8. PREPARATION FOR MOVEMENT AND STORAGE. To prepare the FSCT for movement, follow the procedures outlined below. As time and circumstances allow, perform operator PMCS "After" services. Clean and dry tent fabric sections and frame.

NOTE

(Type II Only)

Tent may be packed without removing liner. DO NOT PACK WET LINER.

a. Remove gear loft. (Gear loft may be left in position if desired.)

b. (Type II only) Remove liner, if installed. (Liner may be left in position if desired.)

c. Close and secure vent flaps and doors.

d. Disconnect adjustable hooks and dee rings and hook and pile fasteners and remove fly. Turn fly over and secure vent flaps.

e. Grasp fly (if used) at each corner. Fold in half so that fly is completely flat. Grasp one extended point of fly and fold to centerline. Repeat for opposite point. Fold roof to the center of the fly so that top edge is straight. Fold other side so that edges meet.

f. Close flaps on tent body assembly. (Leave door open.)

g. Disconnect hook and pile fasteners securing tent body assembly to frame.

h. Disconnect cord loops attaching tent body assembly to hooks on frame assembly.

i. Remove top center cord loop from snap hook on center hub.

WARNING

Frame assembly will be under tension when inserting pins. Stand to side of frame assembly poles when performing the next step. Frame members could strike and injure you if they slip.

j. Remove frame assembly from tent body assembly.

k. Remove four frame poles from center hub.

2-8. PREPARATION FOR MOVEMENT AND STORAGE - Cont'd.

l. Fold frame poles and secure with rubber bands.

m. Insert folded tent frame assembly into its bag. Close drawstring and cinch web straps.

n. Remove tent pins and store in tent pin bag.

o. Keeping tent body assembly extended and square, uniformly spread roof, walls, and floor.

p. Grasp corners at front and rear of one side of tent body assembly and fold to centerline. Fold again to centerline. Repeat for opposite side.

NOTE

Folded width of tent should be approximately same length as stowed frame assembly.

q. Place folded fly, liner, gear loft, and tent pin bag on tent body.

r. Place frame assembly package at end and on top of folded fly and tent body assembly. Roll to form a tight package, using frame package as a hub.

s. Lay tent cover on ground with webbing facing ground. Place rolled package in center of cover so that webbing straps on cover will form a circle around circumference of rolled package. Fold cover ends first, so that carrying handles are located approximately at center of rolled diameter.

t. Roll cover and contents tightly and secure with fasteners.

SECTION IV. OPERATION UNDER UNUSUAL CONDITIONS

2-9. GENERAL. While it is not possible to prepare for all unusual conditions to which the FSCT will be exposed, the following information should be helpful during unusual climatic conditions.

a. Operation in High Wind:

(1) Ensure that tent body and frame assemblies are staked.

(2) Close and fasten all windows and doors.

(3) Frequently check all tent pins and lines.

b. Wet Climate.

(1) If heavy rain is expected or the FSCT is going to be set up for a long period of time, dig a trench around the tent to channel water away from it.

(2) Tent lines may shrink from dampness, so keep tent lines loose enough to prevent tent pins from being pulled out of the ground.

(3) Dry all FSCT components before repacking.

c. Operation in Snow/Extreme Cold.

WARNING

SUFFOCATION HAZARD. FSCT fabric does not "breathe". Open windows and flaps as necessary to ensure adequate ventilation. If all openings are closed, it is possible to use up all of the oxygen contained in the tent, especially during sleeping hours, RESULTING IN DEATH.

(1) Gently push up on the roof cap from inside the FSCT to remove snow.

(2) If erecting the FSCT in snow, lightly pack the snow to provide a firm surface on which to set up.

(3) If ground is frozen too hard to drive steel tent pins, chop small holes to set them in. Fill holes with slush or water and allow to freeze and anchor pins.

(4) Install liner assembly as described above.

CHAPTER 3

OPERATOR MAINTENANCE INSTRUCTIONS

Subject	Section/Paragraph
Lubricating Instructions	I
General	3-1
Troubleshooting Procedures	II
General Instructions	3-2
Use of Table	3-3
Operator Maintenance Procedures	III
Inspection	3-4
Cleaning	3-5
Frame Assembly Repair	3-6
Fabric Repair	3-7

SECTION I. LUBRICATING INSTRUCTIONS

3-1. GENERAL. Zippers can be lubricated using the Zipperease contained in the repair kit.

SECTION II. OPERATOR TROUBLESHOOTING PROCEDURES

3-2. GENERAL INSTRUCTIONS. Table 3-1 contains troubleshooting instructions designed to aid in diagnosing unsatisfactory operation or failure of FSCT components. The table lists common malfunctions that you may find during normal use or maintenance of the equipment. This manual cannot list all malfunctions that may occur, nor all tests and inspections and corrective actions. If a malfunction is not listed or is not corrected by the prescribed action, notify unit maintenance.

MALFUNCTION INDEX

FSCT	Troubleshooting Procedures Paragraph
FSCT Unstable	1
FSCT Leaks	2

3-3. USE OF TABLE. You should perform the tests/inspections and corrective actions in the order listed.

a. *Malfunction*. Check for where or what the malfunction is.

b. *Test or Inspection*. Test or inspect the cause of the malfunction.

c. *Corrective Action*. Once the malfunction is determined, correct the situation.

TABLE 3-1. OPERATOR TROUBLESHOOTING

MALFUNCTION TEST OR INSPECTION CORRECTIVE ACTION

1. FSCT UNSTABLE

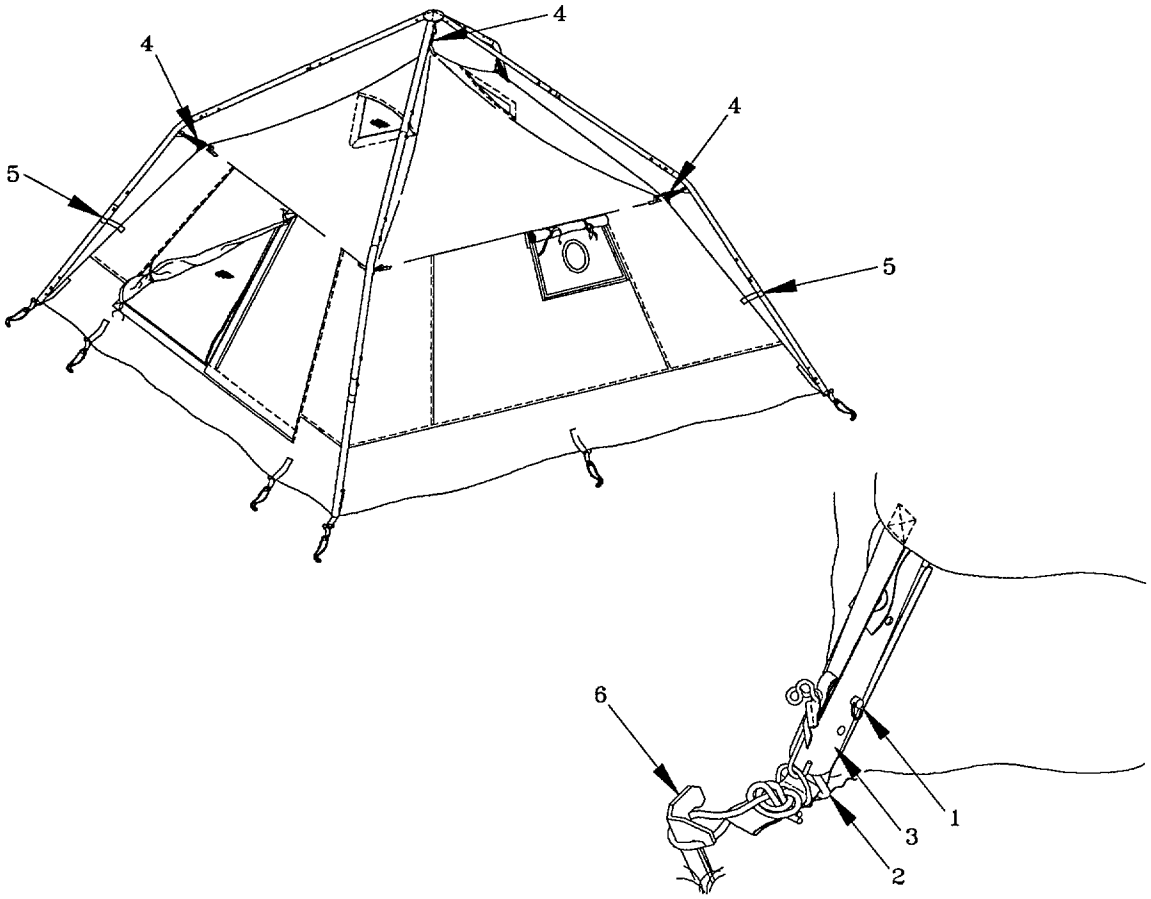

Step 1. Check frame assembly for proper setup, loose or missing hardware (1). Check that floor to frame connectors (2) are installed in bottom of frame poles (3).

Adjust frame as necessary. Install floor to frame connectors in poles. Tighten/replace loose/missing hardware.

Step 2. Check that cords (4) are properly adjusted. Check that hook and pile fasteners (5) are properly adjusted. Check for missing/loose tent pins (6).

Adjust cords and hook and pile fasteners as necessary. Replace tent pins as necessary.

TABLE 3-1. OPERATOR TROUBLESHOOTING

MALFUNCTION TEST OR INSPECTION CORRECTIVE ACTION

2. FSCT LEAKS

Step 1. Check for improperly closed flaps.

Secure flaps.

Step 2. Check for holes, tears, or cuts in fabric.

Repair as necessary. (See para 3-7)

Step 3. Check seams for leaks.

Repair as necessary. (See para 3-7)

SECTION III. OPERATOR'S MAINTENANCE PROCEDURES

3-4. INSPECTION. Perform inspection as described in Chapter 2, Section II, PMCS. Report defects on DA Form 2404.

3-5. CLEANING. Clean all FSCT fabric components with a brush (Item 2, Appendix F) and mild soapy water (Item 1, Appendix F). Let fabric components air dry.

3-6. REPAIR FRAME ASSEMBLY.

This task covers: Repair

INITIAL SETUP

Tools:

FSCT Repair Kit (Appendix B, Section III, Item 1)

Materials/Parts:

Cylindrical Spring (Appendix C, Fig. 2. Item 13)
Frame Joint Sleeve (Appendix C, Fig. 2, Items 7,8)
Pole Cable Assembly (Appendix C, Fig. 2, Items 9,14)

Equipment Condition:

Frame should be removed from tent to accomplish repairs.

REPAIR

Frame Joint Sleeve, Pole Cable Assembly, Cylindrical Spring

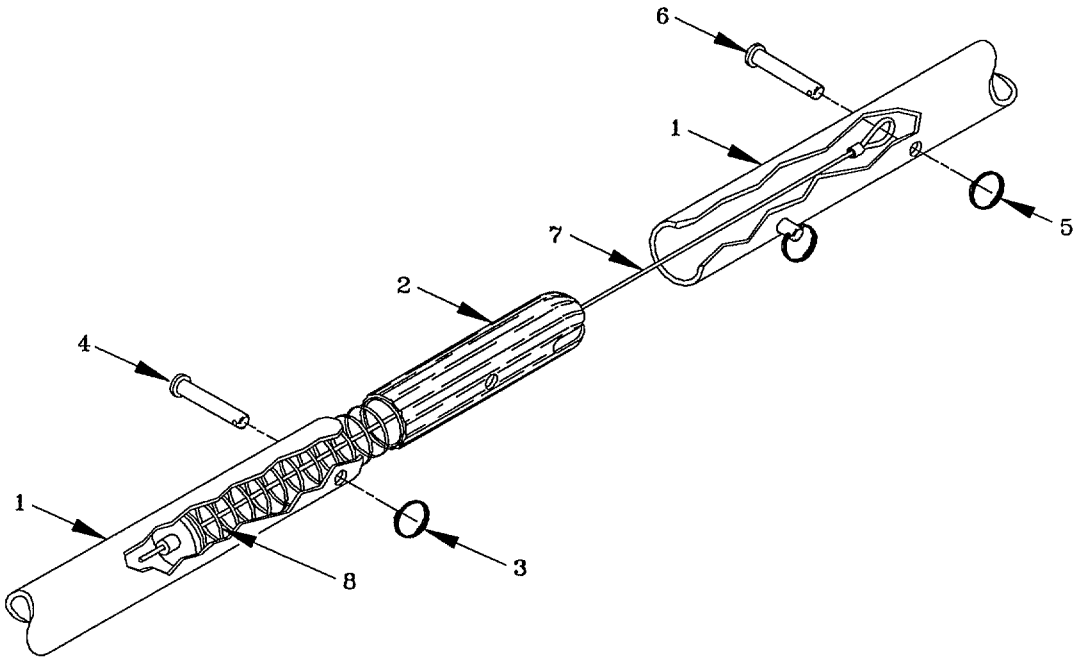

3-6. REPAIR FRAME ASSEMBLY (CONTINUED)

a. Remove

(1) Gently pull the frame poles (1) closest to the joint sleeve (2) to be replaced apart. Do not open the joint more than is necessary. This will keep pressure off the spring and make it easier to hold the cable.

(2) Carefully spread the split ring (3) and remove it from the frame pin (4) securing the sleeve joint (2) to the frame pole (1).

(3) Remove the frame pin (4).

(4) Pull frame joint sleeve (2) and pole cable assembly (7) out of frame pole (1).

(5) Carefully spread the split ring (5) and remove it from the frame pin (6) securing the pole cable assembly (7) to the frame pole (1). Remove the frame pin.

(6) Remove the frame sleeve joint (2) by pulling it over the pole cable assembly (7). Retain cable and spring for re-use.

b. Install

(1) With the spring (8) installed on the pole cable assembly (7), slide the new frame sleeve joint (2) over the pole cable assembly (7).

(2) Extend the cable and pass the new frame pin (6) through one side of the frame pole (1), through the loop in the pole cable assembly (7), and out the other side of the frame pole (1).

(3) Carefully spread the split ring (5) and thread it through the hole in the frame pin (6).

(4) Insert pole cable assembly (7), spring (8), and frame joint sleeve (2) into frame pole (3).

(5) Align holes in frame joint sleeve (2) with holes in frame pole (1) and push frame pin (4) through both sets of holes.

(6) Carefully spread the split ring (3) and thread it through the hole in the frame pin (4).

(7) Check frame assembly for proper operation.

3-7. REPAIR FABRIC ASSEMBLIES

This task covers: Repair

INITIAL SETUP

Tools:

FSCT Repair Kit (Appendix B, Section III, Item 1)

Materials/Parts:

Denatured Alcohol (Appendix F, Section II, Item 3)
FSCT Repair Kit (Appendix B, Section III, Item 1)
Wiping Rags (Appendix F, Section II, Item 10)

Equipment Condition:

Although the fabric assemblies can be repaired during operational use of the tent when necessary, it is recommended that the fabric be repaired when the tent is not in use. Fabric assemblies should be clean and dry.

Repair Fabric Assemblies

WARNING

Seam sealer and solvent are extremely flammable and the fumes toxic. Do not smoke or use seam sealer or solvent near open flame. Use seam sealer and solvent with goggles and gloves, and indoors with respirator or in an open, well-ventilated area away from sources of combustion. DEATH OR SEVERE INJURY may result from explosion or fire. Inhalation of fumes may cause toxic sickness.

Repair minor rips and tears (maximum of six inches in length) or holes (maximum of two inches in diameter) with the materials in the FSCT repair kit. Seam sealer can be used on pinholes, stitching, and small repairs.

3-7. REPAIR FABRIC ASSEMBLIES - Cont'd.

WARNING

Seam sealer and solvent are extremely flammable and fumes toxic - contains toluene and isopropyl alcohol. Do Not smoke or use seam sealer or solvent near open flame. Death or serious injury may result from explosion or fire.

Use seam sealer and solvent in an open, well- ventilated area away from sources of combustion; indoors wear a respirator. Avoid contact with skin and eyes. Wear goggles and gloves when using seam sealer and solvent. Inhalation of fumes may cause toxic sickness.

The tape contained in the repair kit can be used for temporary repairs. The sewing awl in the repair kit can be used for minor sewing repairs. Turn in fabric assemblies to unit maintenance for anything other than minor repairs.

Replace missing or damaged cord, rope, or hook and pile fasteners with material in the repair kit.

Chapter 4

UNIT MAINTENANCE INSTRUCTIONS

Subject Section/Paragraph

Lubrication Instructions 1
General 4-1
Repair Parts, Special Tools, TMDE, and Support Equipment..... II
Common Tools and Equipment 4-2
Special Tools 4-3
Repair Parts..... 4-4
Service Upon Receipt III
Unpacking 4-5
Inspecting Unpacked Equipment 4-6

4-10. REPAIR FRAME ASSEMBLY - Cont'd.

a. Hub Assembly

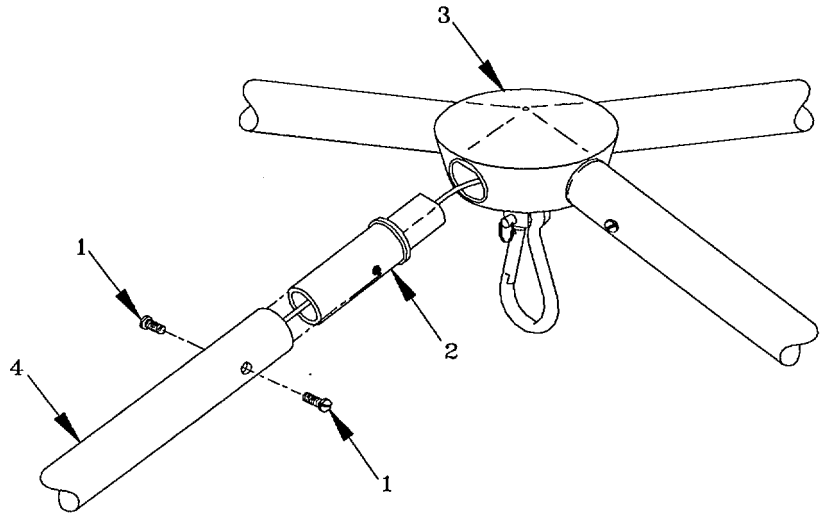

(1) Remove

(a) Remove eight pan head screws (1) securing pole legs

(2) of hub assembly (3) to frame poles (4).

(b) Remove hub assembly (3) from frame poles (4).

(2) Install

(a) Insert pole legs (2) of hub assembly (3) into frame poles (4).

(b) Secure pole legs (2) of hub assembly (3) to frame poles (4) with pan head screws (1).

4-10. REPAIR FRAME ASSEMBLY - Cont'd.

b. Safety Spring Snap

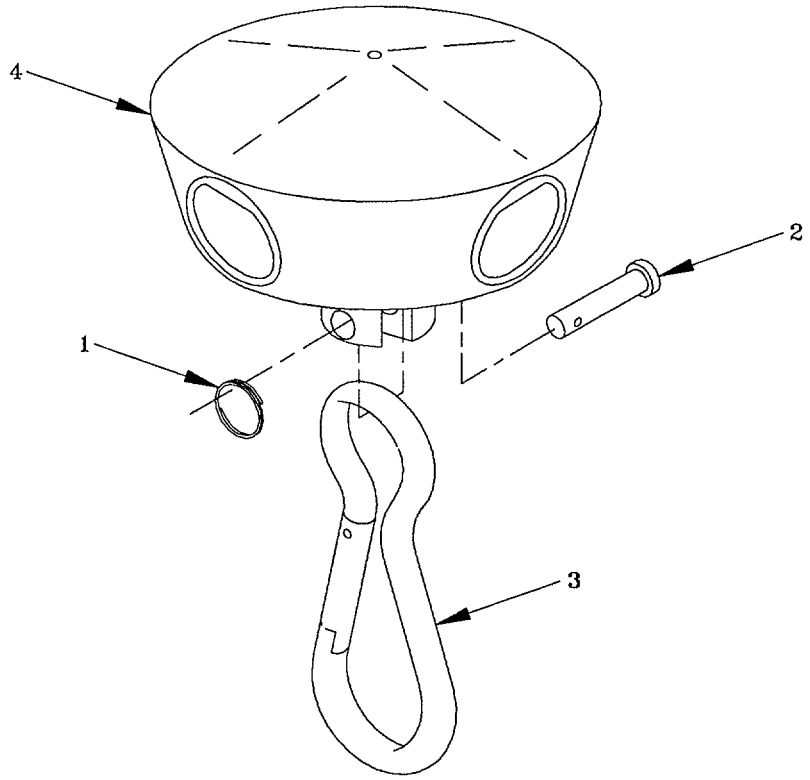

(1) Remove

(a) Remove split ring (1) and frame pin (2) securing safety spring snap (3) to hub assembly (4).

(b) Remove safety spring snap (3) from hub assembly (4).

(2) Install

(a) Align safety spring snap (3) with holes in hub assembly (4).

(b) Insert frame pin (2) through hub assembly (4) and safety spring snap (3) and secure with split ring (1) .

4-10. REPAIR FRAME ASSEMBLY - Cont'd.

c. Bottom Pole Sleeve

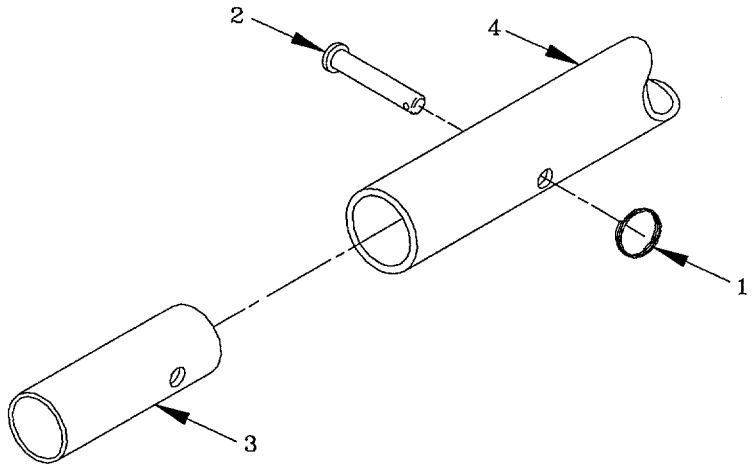

(1) Remove

(a) Remove split ring (1) and frame pin (2) securing bottom pole sleeve (3) to frame pole (4).

(b) Remove bottom pole sleeve (3) from frame pole (4).

(2) Install

(a) Insert bottom pole sleeve (3) into frame pole (4).

(b) Align holes in bottom pole sleeve (3) and frame pole (4).

(c) Insert frame pin (2) through holes in bottom pole sleeve (3) and frame pole (4) and secure with split ring (1).

4-10. REPAIR FRAME ASSEMBLY - Cont'd.

d. Frame Pole Long, Frame Pole Short, Pole & Hook Assembly

Equipment Condition:

Hub Assembly removed, as required (Refer to Para 4-10.a.) Bottom Pole Sleeve removed, as required (Refer to Para 4- 10.c.)
Frame Joint Sleeve removed, as required (Refer to para 3-6.)

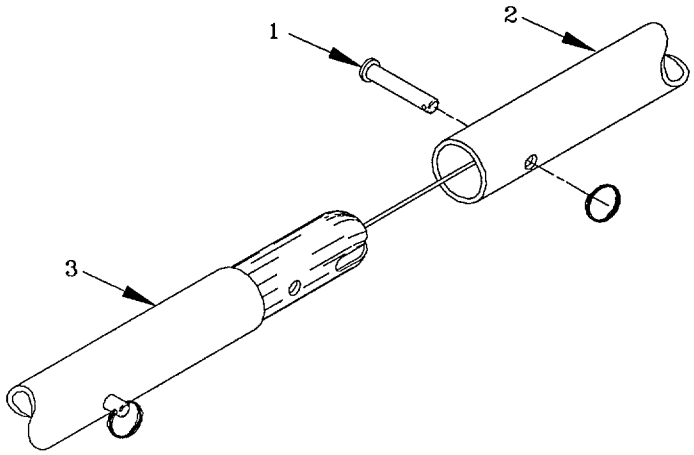

(1) Remove

(a) Remove aligning frame pin (1) from frame pole (2). Retain for reuse.

(b) Remove frame pole (2) from frame assembly (3).

(2) Install

(a) Install aligning frame pin (1).

(b) Install frame pole (2) on frame assembly (3).

(c) Install frame joint sleeve, if removed. (Refer to para 3-6.)

(d) Install hub assembly, if removed. (Refer to Para 4- 10.a.)

(e) Install bottom pole sleeve, if removed. (Refer to Para 4-10.c.) 4-7

4-11. REPAIR TENT FABRIC ASSEMBLIES.

This task covers: Repair of Fabric Assemblies.

INITIAL SETUP

Tools:

Brush (Appendix B, Section III, Item 2)
Tentage Repair Kit (Appendix B, Section III, Item 1)

Materials/Parts:

Denatured Alcohol (Appendix F, Section II, Item 3)
Filter, Cartridge (Appendix F, Section II, Item 4)
Gloves, Latex-Nitrile (Appendix F, Section II, Item 5)
Goggles, Chemical Splash (Appendix F, Section II, Item 6)
Kote Seam Sealer (Appendix F, Section II, Item 7)
Respirator (Appendix F, Section II, Item 8)
Wiping Rags (Appendix F, Section II, Item 10)

Equipment Conditions:

Although the fabric assemblies can be repaired during operational use of the tent when necessary, it is recommended that the fabric be repaired when the tent is not in use, since repairs are easier when the fabric assemblies are separated. The fabric assemblies should be clean and dry.

Repair Fabric Assemblies

Repair all rips, tears or holes up to a maximum of six inches by sewing or patching, using the tools and materials listed above. Follow the procedures in FM 10-16 to make these repairs. Turn in fabric assemblies to direct support maintenance for repair of holes 6" or larger or ripped seams.

WARNING

Seam sealer and solvent are extremely flammable and fumes toxic - contains toluene and isopropyl alcohol. Do Not smoke or use seam sealer or solvent near open flame. Death or serious injury may result from explosion or fire.

Use seam sealer and solvent in an open, well- ventilated area away from sources of combustion; indoors wear a respirator. Avoid contact with skin and eyes. Wear goggles and gloves when using seam sealer and solvent. Inhalation of fumes may cause toxic sickness.

4-11. REPAIR TENT FABRIC ASSEMBLIES - Cont'd.

Apply seam sealer to repaired areas as follows:

NOTE

Tent can be erected or fabric assemblies can be removed and laid flat.

Do not use a foam brush. Use a bristle brush only.

Sealer may be applied to outside or inside of fabric assemblies.

Sealer should only be applied to new stitches and patches, or to those areas that have shown water leakage.

Two light coats of sealant are more effective than one thick coat. Do not use excessive amounts of sealer, as this does not increase effectiveness and will give the tent a poor appearance.

Do not leave original sealer container open, as sealer will thicken and become unusable. Limit the amount of time container is open.

a. Surface to be sealed should be cleaned as thoroughly as practical and completely dry before applying sealer.

b. Pour small amount of sealer into a clean container and immediately reseal the sealer container.

c. Apply sealer to stitching or repair to be sealed, overlapping seam stitching or edges of repair by 1/2".

d. Allow first coat to dry to the touch.

e. Apply second coat as described in step (3).

SECTION VII. PREPARATION FOR STORAGE OR SHIPMENT

4-12. PREPARATION FOR STORAGE. To prepare the FSCT for storage, clean and dry the fabric sections and other components as described in paragraph 3-5. Perform operator PMCS as specified in Table 2-2.

Pack the fabric and frame assemblies as described in paragraph 2- 8. Place on a wooden pallet and store in a dry place.

Special Instructions for Administrative Storage.

Placement of equipment in administrative storage should be for short periods of time when a shortage of maintenance resources 4-9

4-12. PREPARATION FOR STORAGE - Cont'd.

exists. Items should be in mission readiness within 24 hours or within the time factors determined by the directing authority. Appropriate maintenance records will be kept during storage.

Before placing equipment in administrative storage, current maintenance services and Equipment Serviceability Criteria (ESC) evaluations should be completed, shortcomings and deficiencies should be corrected, and all Modification Work Orders (MWOs) should be applied.

Storage site selection. Inside storage is preferred for items selected for administrative storage. If inside storage is not available, trucks, vans, conex or other containers may be used.

4-13. PRESERVATION. If the FSCT components are to be stored without regular PMCS being performed, consult TM 38-230-2 for preservation requirements.

4-14. PREPARATION FOR SHIPMENT. Prepare the FSCT for shipment by packing components in the tent cover assembly.

CHAPTER 5

DIRECT SUPPORT MAINTENANCE INSTRUCTIONS

Subject	Section/Paragraph
Repair Parts, Special Tools; Test Measurement Diagnostic Equipment (TMDE) and Support Equipment	I
Common Tools and Equipment	5-1
Special Tools, TMDE, and Support Equipment	5-2
Repair Parts	5-3
Troubleshooting	II
Troubleshooting Procedures	5-4
Direct Support Maintenance Procedures	III
General	5-5
Machine Stitching	5-6
Automatic Stitching	5-7
Fabric Assemblies	5-8

SECTION I. REPAIR PARTS, SPECIAL TOOLS; TEST MEASUREMENT DIAGNOSTIC EQUIPMENT (TMDE) AND SUPPORT EQUIPMENT

5-1. COMMON TOOLS AND EQUIPMENT. For authorized common tools and equipment refer to the Modified Table of Organization and Equipment (MTOE) applicable to your unit.

5-2. SPECIAL TOOLS, TMDE, AND SUPPORT EQUIPMENT. Refer to Appendix B, Section II, Tool and Test Equipment Requirements, Maintenance Allocation Chart, for additional tool and equipment requirements.

5-3. REPAIR PARTS. Repair parts are listed and illustrated in Appendix C, Repair Parts and Special Tools List.

SECTION II. TROUBLESHOOTING

5-4. TROUBLESHOOTING PROCEDURES. There are no separate Direct Support troubleshooting procedures for the Five Soldier Crew Tent. Refer to Chapter 3 for operator troubleshooting procedures.

SECTION III. MAINTENANCE PROCEDURES

5-5. GENERAL. Direct Support maintenance functions identified in Section II, Appendix B, consist of machine repair of sewn components. Procedures for machine stitching are provided in paragraph 5-7. Specific tentage repair procedures are provided in FM 10-16.

5-6. MACHINE STITCHING. All stitch types, except bartacking, shall conform to FED-STD-751. Type 301 stitching requires 5-8 stitches per inch. Type 401 stitching requires 6-9 stitches per inch. All stitching is to be 1/8 inch from edge or 1/8 inch

5-6. MACHINE STITCHING - Cont'd.

apart, unless otherwise specified. Bar tacking shall be free of breaks and loose stitching.

a. *Thread Breaks*. Thread breaks in stitching shall be overstitched not less than 1 inch at each break on stitch type 301, and not less than 1 1/2" at each break on stitch type 401. Thread breaks in type 401 may be overstitched with stitch type 301. Thread breaks noted during inspection must be repaired by overstitching the existing stitching, starting from a distance of 1 inch beyond the break. The ends of repair stitching are not required to be backstitched.

b. *Stitching Ends*. The ends of type 301 stitching shall be overstitched not less than 1 inch except where ends are turned under in a hem or held down by other stitching. Where 301 stitching is performed automatically on stitch patterns such as box, box with cross-stitch , "W" stitching or straight line tacking, at least three tying, overlapping, or back stitches shall be used to secure the ends of stitching.

c. *Skipped Stitches*. Two or more consecutively skipped stitches occurring in type 301 stitching shall be overstitched not less than 1 inch. Any skipped stitches in type 401 stitching shall be overstitched not less than 1 1/2 inches. Skipped stitches in 401 stitching may be overstitched with type 301 stitching. Skipped stitches noted during inspection shall be repaired as specified for thread breaks in a., above.

5-7. AUTOMATIC STITCHING. Automatic stitching machines may be used to perform any of the required stitch patterns provided the requirements of the stitch pattern, stitches per inch, size and type of thread are met, and at least three or more overlapping, tying or backstitches secure the ends of the stitching.

5-8. REPAIR FABRIC ASSEMBLIES

This task covers: a. Repair Fabric Assemblies

INITIAL SETUP

Tools:

Sewing Machine (Appendix B, Section III, Item 3)

Materials/Parts:

Refer to Appendix C, Figure BULK

5-8. REPAIR FABRIC ASSEMBLIES - Cont'd.

Repair Fabric Assemblies

Repair rips, tears, holes or separated seams as necessary. Follow the procedures outlined in paragraphs 5-6 and 5-7 above and FM 10-16 to perform the repairs.

APPENDIX A

REFERENCES

A-1. TECHNICAL MANUALS

TM 750-244-3	Destruction of Army Materiel to Prevent Enemy Use
TM 38-230-2	Preservation, Packaging and Packing of Military Supplies and Equipment

A-2. FIELD MANUALS

FM 10-16	General Fabric Repair

A-3. DA PAMPHLETS

DA PAM 738-750	The Army Maintenance Management System (TAMMS)
DA PAM 25-30	Consolidated Index of Army Publications and Blank Forms

A-4. FEDERAL STANDARDS

751	Stitches, Seams and Stitchings

A-5. FORMS

DA Form 2404	Equipment Inspection and Maintenance Worksheet
DA Form 2028-2	Recommended changes to Equipment Technical Publications
DD Form 6	Packaging Improvement Report
SF 368	Quality Deficiency Report

APPENDIX B

MAINTENANCE ALLOCATION

Section I. Introduction

B-1. GENERAL.

a. This section provides a general explanation of all maintenance and repair functions authorized at various maintenance levels.

b. The Maintenance Allocation Chart (MAC) in Section II designates overall authority and responsibility for the performance of maintenance functions on the identified end item or component. The application of the maintenance functions to the end item or component will be consistent with the capacities and capabilities of the designated maintenance levels.

c. Section III lists the tools and test equipment (both special tools and common tool sets) required for each maintenance function as referenced from Section II.

d. Section IV contains supplemental instructions and explanatory notes for a particular maintenance function.

B-2. MAINTENANCE FUNCTIONS. Maintenance functions will be limited to and defined as follows:

a. Inspect. To determine the serviceability of an item by comparing its physical, mechanical and/or electrical characteristics with established standards through examination.

b. Test. To verify serviceability and to detect incipient failure by measuring the mechanical or electrical characteristics of an item and comparing those characteristics with prescribed standards.

c. Service. Operations required periodically to keep an item in proper operational condition, i.e., to clean (decontaminate), to preserve, to drain, to paint, or to replenish fuel, lubricants, hydraulic fluids, or compressed air supplies.

d. Adjust. To maintain, within prescribed limits, by bringing into proper or exact position, or by setting the operating characteristics to the specified parameters.

e. Alien. To adjust specified variable elements of an item to bring about optimum or desired performance.

f. Calibrate. To determine and cause corrections to be made or to be adjusted on instruments or test measuring and diagnostic equipments used in precision measurement. Consists of comparisons of two instruments, one of which is a certified standard of known accuracy, to detect and adjust any discrepancy in the accuracy of the instrument being compared.

B-2. MAINTENANCE FUNCTIONS - Cont'd

g. Remove/Install. The act of emplacing, seating, or fixing into position an item, part, module (component or assembly) in a manner to allow the proper functioning of the equipment or system.

h. Replace. The act of substituting a serviceable like type part, subassembly, or module (component or assembly for an unserviceable counterpart.

i. Repair. The application of maintenance services (inspect, test, service, adjust, aline, calibrate, replace) or other maintenance actions (welding, grinding, riveting, straightening, facing remachining, or resurfacing) to restore serviceability to an item by correcting specific damage, fault, malfunction, or failure in a apart, subassembly, module (component or assemble), end item, or system.

j. Overhaul. The maintenance effort (service/action) necessary to restore an item to a completely serviceable/ operational condition as prescribed by maintenance standards (i.e., DMWR) in appropriate technical publications. Overhaul is normally the highest degree of maintenance performed by the Army. Overhaul does not normally return an item to like new condition.

k. Rebuild. Consists of those service/actions necessary for the restoration of unserviceable equipment to a like new condition in accordance with original manufacturing standards. Rebuild is the highest degree of material maintenance applied to Army equipment. The rebuild operation includes the act of returning to zero those age measurements (hours, miles, etc.) considered in classifying Army equipments/components.

B-3. COLUMN ENTRIES.

a. Column 1- Group Number. Column 1 lists group numbers, the purpose of which is to identify components, assemblies, subassemblies, and modules with the next higher assembly.

b. Column 2 - Component/Assembly. Column 2 contains the noun names of components, assemblies, subassemblies, and modules for which maintenance is authorized.

c. Column 3 - Maintenance Functions. column 3 lists the functions to be performed on the item listed in column 2. When items are listed without maintenance functions, it is solely for the purpose of having the group number in the MAC and RPSTL coincide.

d. Column 4 - Maintenance Level. Column 4 specifies, by the listing of "work time" figures in the appropriate subcolumn(s), the lowest level of maintenance authorized to perform the function listed in column 3. This figure represents the active time required to perform that maintenance function at the indicated level maintenance. If the number or complexity

B-3. COLUMN ENTRIES - Cont'd.

of the tasks within the listed maintenance function vary at different maintenance levels, appropriate "work time" figures will be shown for each level. The number of task-hours specified by the "work time" figure represents the average time required to restore an item (assembly, subassembly, component, module, end item or system) to a serviceable condition under typical field operating conditions. This time includes preparation time, troubleshooting time, and quality assurance / quality control time in addition to the time required to perform the specific tasks identified for the maintenance functions authorized in the maintenance allocation chart. Subcolumns of column 4 are as follows:

C	Operator/Crew
O	Unit
F	Direct Support
H	General Support
D	Depot

e. Column 5 - Tools and Equipment. Column 5 specifies by code those common tool sets (not individual tools) and special tools, test, and support equipment required to perform the designated function.

f. Column 6 - Remarks. Column 6 contains an alphabetic code which leads to the remark in Section IV, Remarks, which is pertinent to the item opposite the particular code.

B-4. TOOL AND TEST EQUIPMENT REQUIREMENTS (Sect. III)

a. Tool or Test Equipment Reference Code. The numbers in this column coincide with the numbers used in the tools and equipment column of the MAC. The numbers indicate the applicable tool or test equipment for the maintenance functions.

b. Maintenance Level. The codes in this column indicate the maintenance level allocated the tool or test equipment.

c. Nomenclature. This column lists the noun name and nomenclature of the tools and test equipment required to perform the maintenance functions.

d. National Stock Number. This column lists the National / Nato stock number of the specific tool or test equipment.

e. Tool Number. This column lists the manufacturer's part number of the tool followed by the Federal Supply Code for manufacturers (5-digit) in parentheses.

B-5. REMARKS. (Section IV)

a. Reference Code. This code refers to the appropriate item in Section II, column 6.

b. Remarks. This column provides the required explanatory information necessary to clarify items appearing in Section II.

SECTION II. MAINTENANCE ALLOCATION CHART
FOR FIVE SOLDIER CREW TEST (FSCT)

(1) GROUP NUMBER	(2) COMPONENT/ASSEMBLY	(3) MAINTENANCE FUNCTION	(4) MAINTENANCE CATEGORY C	O	F	H	D	(5) TOOLS AND EQPT	(6) REMARKS
00	FIVE SOLDIER CREW TENT	INSPECT	.3						
		SERVICE	.5						
		REPLACE	.2						
		REPAIR	.3	.3	1.0			1,2,3	A,B
01	FRAME ASSEMBLY	INSPECT	.3						
		SERVICE	.5						
		REPLACE	.2						
		REPAIR	.3	.5				2	
02	TENT BODY ASSEMBLY	INSPECT	3						
		SERVICE	.5						
		REPLACE	.2						
		REPAIR	.3	.3	1.0			1,2,3	A,B
03	FLY ASSEMBLY	INSPECT	.3						
		SERVICE	.5						
		REPLACE	.2						
		REPAIR	.3	.3	.5			1,2,3	A,B
04	COVER ASSEMBLY	INSPECT	.3						
		SERVICE	.5						
		REPLACE	.2						
		REPAIR	.3	.3	.5			1,2,3	A,B
05	FSCT PEGS, BAG	INSPECT	.3						
		SERVICE	.5						
		REPLACE	.2						
		REPAIR	.3	.3					
06	LINER ASSEMBLY	INSPECT	.3						
		SERVICE	.5						
		REPLACE	.2						
		REPAIR	.3	.3	.5			1,2,3	A,B

SECTION III. TOOLS AND TEST EQUIPMENT
FOR
FIVE SOLDIER CREW TENT (FSCT)

TOOL/TEST EQUIPMENT REFERENCE CODE	MAINTENANCE LEVEL	NOMENCLATURE	NATIONAL STOCK NUMBER	TOOL NUMBER
1	C	REPAIR KIT, TENTAGE	5-4-7683-1	
2	O	TOOL KIT, GENERAL MECHANIC'S	5180-00-177-7033	
3	F	SEWING MACHINE, INDUSTRIAL	3530-00-892-4631	

SECTION IV. REMARKS
FOR
FIVE SOLDIER CREW TENT (FSCT)

REFERENCE CODE	REMARKS
A	Repair of fabric at operator/crew level is limited to the capability of the Tentage Repair Kit
B	Repair of fabric at organizational level is limited to the capability of the Tentage Repair Kit

APPENDIX C

OPERATOR'S, UNIT, AND DIRECT SUPPORT MAINTENANCE REPAIR PARTS AND SPECIAL TOOLS LIST

SECTION I. INTRODUCTION

C-1. SCOPE. This Repair Parts and Special Tools List (RPSTL) lists and authorizes spares and repair parts; special tools; special Test, Measurement, and Diagnostic Equipment (TMDE); and other special support equipment required for performance of unit and direct support maintenance of the FSCT. It authorizes the requisition, issue, and disposition of spares, repair parts, and special tools as indicated by the Source, Maintenance, and Recoverability (SMR) codes.

C-2. GENERAL. In addition to Section I, Introduction, this RPSTL is divided into the following sections:

a. *Section II*. Repair Parts List. A list of spares and repair parts authorized by this RPSTL for use in the performance of maintenance. The list also includes parts that must be removed for replacement of the authorized parts. Parts lists are composed of functional groups in ascending alpha-numeric sequence, with the parts in each group listed in ascending figure and item number sequence. Repair parts kits or sets are listed in ascending figure and item number sequence. Bulk materials are listed by item name in FIG BULK at the end of the section. Repair parts kits or sets are listed separately in their own functional group within section II. Repair parts for repairable special tools are also listed in the section.

b. *Section III*. Special Tools List. A list of special tools, special TMDE, and other special support equipment authorized by this RPSTL (as indicated by Basis of Issue (BOI) information in DESCRIPTION AND USABLE ON CODE (UOC) column) for the performance of maintenance.

c. *Section IV*. National Stock Number and Part Number Index. A list, in National Item Identification Number (NIIN) sequence, of all national stock numbered items appearing in the listings, followed by a list in alpha-numeric sequence of all part numbers appearing in the listing. NSNs and part numbers are cross-referenced to each illustration figure and item number appearance. The figure and item number index lists figure and item number in alphanumeric sequence and cross-references NSN, FSCM and part number.

C-3. EXPLANATION OF COLUMNS. (Sections II and III).

a. *ITEM NO. (Column (1)).* Indicates the number used to identify items called out in the illustration.

b. *SMR CODE (Column (2)).* The SMR code is a 5-position code containing supply/requisitioning information, maintenance category authorization criteria, and disposition instructions, as shown in the following breakout:

Source Code	Maintenance Code		Recoverability Code
1st two positions	3rd position	4th position	5th position
xx	x	x	x
How you get an item	Who can install replace or use the item.	Who can do complete repair on the item.	Who determines disposition action on an unserviceable item .

NOTE

Complete repair is the maintenance capacity, capability, and authority to perform all corrective maintenance tasks of the "Repair" function in a use/user environment in order to restore serviceability to a failed item.

(1) Source Code. The source code tells you how to get an item needed for maintenance, repair, or overhaul of an end item/equipment. Explanations of source codes follow:

CODE	EXPLANATION
PA PB PC** PD PE PF PG	Stocked items; use the applicable NSN to request/ requisition items with these source codes. They are authorized to the category indicated by the code entered in the third position of the SMR code. **NOTE: Items coded PC are subject to deterioration.
KD KF KB	Items with these codes are not to be requested/ requisitioned individually. They are part of a kit that is authorized to the maintenance category indicated in the third position of the SMR code. The complete kit must be requisitioned and applied.

CODE	EXPLANATION
MO-(Made at unit/ AVUM Level) MF-(Made at DS/ AVUM Level) MH-(Made at GS Level) ML-(Made at Specialized Repair Act (SRA) MD-(Made at Depot)	Items with these codes are not to be requested/ requisitioned individually. They must be made from bulk material that is identified by the part number in the DESCRIPTION AND USABLE ON CODE (UOC) column and listed in the bulk material group of the repair parts list in this RPSTL. If the item is authorized to you by the third position code of the SMR code, but the source code indicates it is made at a higher level, order the item from the higher level of maintenance.
AO-(Assembled by unit/AVUM Level) AF-(Assembled by DS/AVIM Level) AH-(Assembled by GS Category) AL-(Assembled by SRA) AD-(Assembled by Depot)	Items with these codes are not to be requested/ requisitioned individually. The parts that make up the assembled item must be requisitioned or fabricated and assembled at the level of maintenance indicated by the source code. If the third position code of the SMR code authorizes you to replace the item, but the source code indicates the item is assembled at a higher level, order the item from the higher level of maintenance.

XA Do not requisition an "XA" - coded item. Order its next higher assembly. (Also, refer to the NOTE below.)

XB If an "XB" item is not available from salvage, order it using the CAGEC and part number given.

XC Installation drawing, diagram, instruction sheet, field service drawing, that is identified by manufacturer's part number.

XD Item is not stocked. Order an "XD" - coded item through normal supply channels using the CAGEC and part number given, if no NSN is available.

NOTE

Cannibalization or controlled exchange, when authorized, may be used as a source of supply for items with the above source codes, except for those source coded "XA" or those aircraft support items restricted by requirements of AR 700-42.

(2) Maintenance Code. Maintenance codes tell you the level(s) of maintenance authorized to USE and REPAIR support items. The maintenance codes are entered in the third and fourth positions of the SMR Code as follows:

(a) The maintenance code entered in the third position tells you the lowest maintenance level authorized to remove, replace, and use the support item. The maintenance code entered in the third position will indicate authorization to one of the following levels of maintenance:

Code	Application/Explanation
C	Crew or operator maintenance done within unit or aviation unit maintenance
O	Unit or aviation unit category can remove, replace, and use the item.
F	Direct support or aviation intermediate level can remove, replace, and use the item.
H	General support level can remove, replace, and use the item.
L	Specialized repair activity can remove, replace, and use the item.
D	Depot level can remove, replace, and use the item.

(b) The maintenance code entered in the fourth position tells whether or not the item is to be repaired and identifies the lowest maintenance level with the capability to do complete repair (i.e., perform all authorized repair functions.) (NOTE: Some limited repair may be done to the item at a lower level of maintenance, if authorized by the Maintenance Allocation Chart (MAC) and SMR codes.) This position will contain one of the following maintenance codes:

Code	Application/Explanation
O	Unit or aviation unit is the lowest level that can do complete repair of the item.
F	Direct support or aviation intermediate is the lowest level that can do complete repair of the item.
H	General support is the lowest level that can do complete repair of the item.
L	Specialized repair activity (designate the specialized repair activity) is the lowest level that can do complete repair of the item.

D	Depot is the lowest level that can do complete repair of the item.
Z	Nonrepairable. No repair is authorized.
B	No repair is authorized. (No parts or special tools are authorized for the maintenance of a "B" coded item). However, the item may be reconditioned by adjusting, lubricating, etc., at the user level.

(3) Recoverability Code. Recoverability codes are assigned to items to indicate the disposition action on unserviceable items. The recoverability code is entered in the fifth position of the SMR Code as follows:

Recoverability Code	Application/Explanation
Z	Nonrepairable item. When unserviceable, condemn and dispose of the item at the level of maintenance shown in third position of the SMR Code.
O	Repairable item. When uneconomically repairable, condemn and dispose of the item at Unit or aviation unit level.
F	Repairable item. When uneconomically repairable, condemn and dispose of the item at the direct support or aviation intermediate level.
H	Repairable item. When uneconomically repairable, condemn and dispose of the item at the general support level.
D	Repairable item. When beyond lower level repair capability, return to depot. Condemnation and disposal of item not authorized below depot level.
L	Repairable item. Condemnation and disposal not authorized below Specialized Repair Activity (SRA).
A	Item requires special handling or condemnation procedures because of specific reasons (e.g., precious metal content, high dollar value, critical material, or hazardous material). Refer to appropriate manuals/ directives for specific instructions.

c. *CAGEC (Column (3)).* The Contractors and Government Entity Code (CAGEC) is a 5-digit numeric code which is used to identify the manufacturer, distributor, or Government agency, etc., that supplies the item.

d. *PART NUMBER (Column (4)).* Indicates the primary number used by the manufacturer (individual, company, firm, corporation, or Government activity) that controls the design and characteristics of the item by means of its engineering drawings, specifications standards, and inspection requirements to identify an item or range of items.

NOTE

When you use an NSN to requisition an item, the item you receive may have a different part number from the part ordered.

e. *DESCRIPTION AND USABLE ON CODE (UOC) Column (5).* This column includes the following information:

(1) The Federal item name and, when required, a minimum description to identify the item.

(2) The physical security classification of the item is indicated by the parenthetical entry (insert applicable physical security classification abbreviation, Phy Sec C1 (C) - Confidential, Phy Sec C1 (S) - Secret, Phy Sec C1 (T) Top Secret).

(3) Items that are included in kits and sets are listed below the name of the kit or set.

(4) Spare/repair parts that make up an assembled item are listed immediately following the assembled item line entry.

(5) Part numbers for bulk materials are referenced in this column in the line item entry for the item to be manufactured/fabricated.

(6) When the item is not used with all serial numbers of the same modes, the effective serial numbers are shown on the last line(s) of the description (before UOC).

(7) The UOC, when applicable (see paragraph 5, Special Information).

(8) In the Special Tools List section, the BOI appears as the last line(s) in the entry for each special tool, special TMDE, and other special support equipment. When density of equipment supported exceeds density spread indicated in the basis of issue, the total authorization is increased proportionately.

(9) The statement "END OF FIGURE" appears just below the last item description in column 5 for a given figure in both section II and section III.

f. *QTY (Column (6)).* The quantity per figure column indicates the quantity of the item used in the breakout shown on the illustration figure, which is prepared for a functional group,

subfunctional group, or an assembly. A "V" appearing in this column in lieu of a quantity indicates that the quantity is variable and the quantity may vary from application to application.

C-4. EXPLANATION OF COLUMNS (SECTION IV).

a. *NATIONAL STOCK NUMBER (NSN) INDEX*.

(1) STOCK NUMBER Column. The NSN columns lists the NSN by National Item Identification Number (NIIN) sequence. The NIIN consists of the last nine digits of the NSN (i.e., N.N

5305-(01-74-1467)
NIIN

When using this column to locate an item, ignore the first 4 digits of the NSN. However, the complete NSN should be used when ordering items by stock number.

(2) FIGURE Column. This column lists the number of the figure where the item is identified/located. The figures are in numerical order in section II and section III.

(3) ITEM Column. The item number identifies the item associated with the figure listed in the adjacent FIG. column. This item is also identified by the NSN listed on the same line.

b. *PART NUMBER INDEX*. Part numbers in this index are listed by part number in ascending alpha-numeric sequence (i.e., vertical arrangement of letter and number combination which places the first letter or digit of each group in order A through Z, followed by the numbers 0 through 9 and each following letter or digit n like order).

(1) CAGEC Column. The Contractor and Government Entity Code (CAGEC) column contains a 5-digit numeric code used to identify the manufacturer, distributor, or Government agency, etc., that supplies the item.

(2) PART NUMBER Column. Indicates the primary number used by the manufacturer (individual, firm, corporation, or Government activity) that controls the design and characteristics of the item by means of its engineering drawings, specifications standards, and inspection requirements to identify an item or range of items.

(3) STOCK NUMBER Column. This column lists the NSN for the last associated part number and manufacturer identified in the PART NUMBER and CAGEC columns to the lift.

(4) FIGURE Column. This column lists the number of the figure where the item is identified/located in sections II and III.

(5) ITEM Column. The item number is that number assigned to the item as it appears in the figure referenced in the adjacent figure number column.

c. *FIGURE AND ITEM NUMBER INDEX*.

(1) FIGURE Column. This column lists the number of the figure where the item is identified/located in sections II and III.

(2) ITEM Column. The item number is that number assigned to the item as it appears in the figure referenced in the adjacent figure number column.

(3) STOCK NUMBER Column. This column lists the NSN for the item.

(4) CAGEC Column. The Contractor and Government Entity Code (CAGEC) column contains a 5-digit numeric code used to identify the manufacturer, distributor, or Government agency, etc., that supplies the item.

(5) PART NUMBER Column. Indicates the primary number used by the manufacturer (individual, firm, corporation, or Government activity) that controls the design and characteristics of the item by means of its engineering drawings, specifications standards, and inspection requirements to identify an item or range of items.

C-5. SPECIAL INFORMATION.

a. *USABLE ON CODE*. Not Applicable.

b. *FABRICATION INSTRUCTIONS*. Bulk materials required to manufacture items are listed in the Bulk Material functional group of this RPSTL. Part numbers for bulk materials are also referenced in the DESCRIPTION column of the line item to be manufactured/fabricated. Detailed fabrication instructions for item source codes to be manufactured or fabricated are found in FM 10-16.

c. *ASSEMBLY INSTRUCTIONS*. Not Applicable.

d. *KITS*. Not Applicable.

e. *INDEX NUMBERS*. Items which have the word "BULK" in the FIGURE column will have an index number shown in the ITEM NUMBER column. This index number is a cross-reference between the National Stock Number/ Part Number Index and the bulk material list in Section II.

C-6. HOW TO LOCATE REPAIR PARTS.

a. *When National Stock Number or Part Number is Not Known.*

(1) First. Using the table of contents, determine the assembly group or subassembly group to which the item belongs. This is necessary since figures are prepared for assembly groups and subassembly groups, and listings are divided into the same groups.

(2) Second. Find the figure covering the assembly group or subassembly group to which the item belongs.

(3) Third. Identify the item on the figure and use the Figure and Item Number Index to find the NSN.

b. When National Stock Number or Part Number is Known:

(1) First. Using the National Stock Number or the Part Number Index. find the pertinent National Stock Number or Part Number. The NSN index is in National Item Identification Number (NIIN) sequence. The part numbers in the Part Number index are listed in ascending alpha-numeric sequence. Both indexes cross-reference you to the illustration/figure and item number of the item you are looking for.

(2) Second. Turn to the figure and item number. verify that the item is the one you're looking for. then locate the item number in the repair parts list for the figure.

C-7. ABBREVIATIONS. Not Applicable.

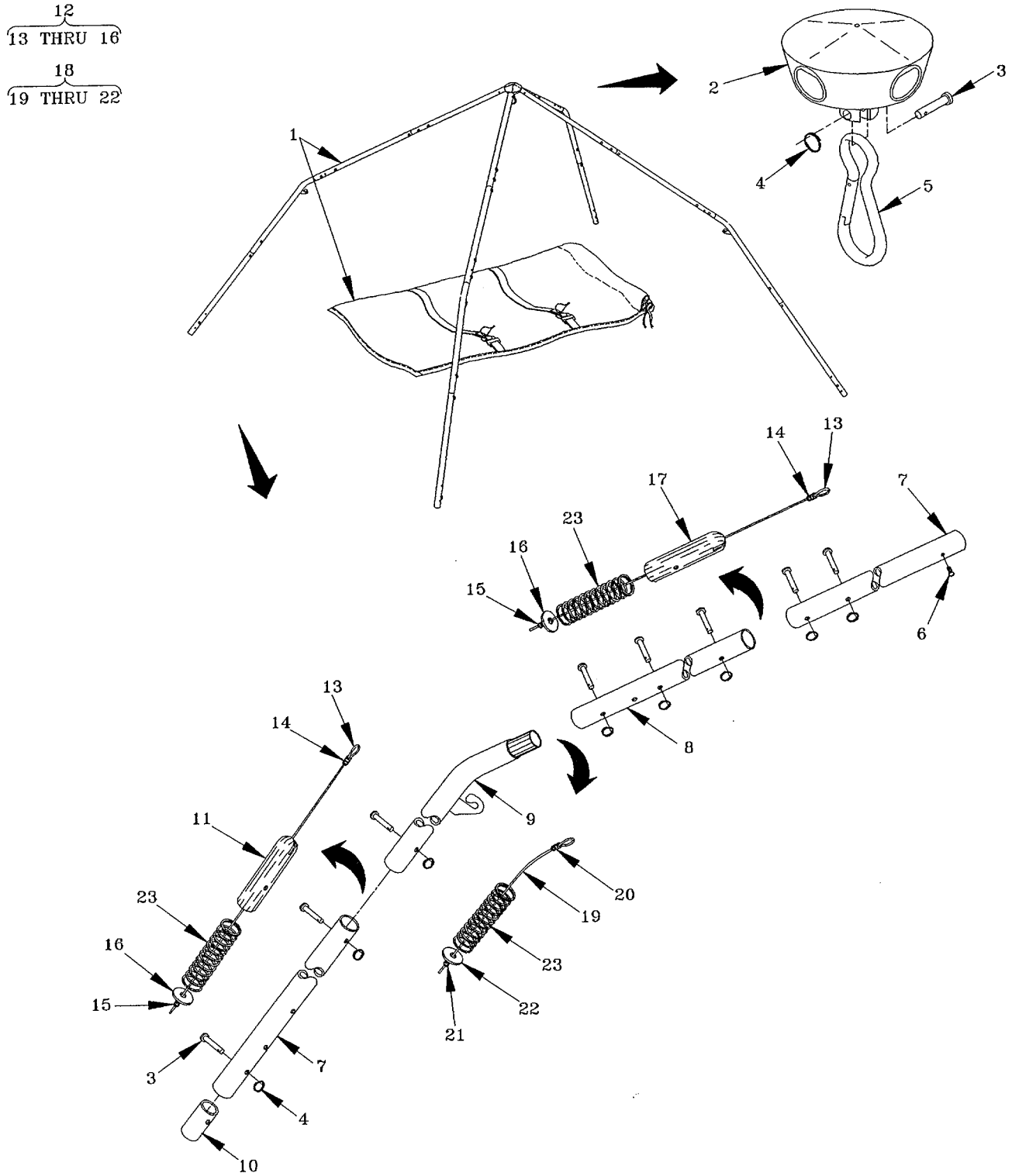

Figure 1. FRAME ASSEMBLY (Sheet 1 of 2)

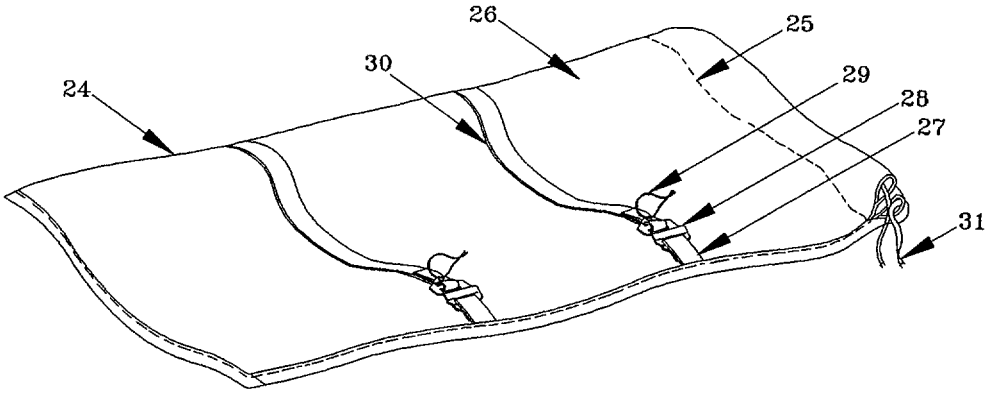

Figure 1. FRAME ASSEMBLY (Sheet 2 of 2)

(1) ITEM NO	(2) SMR CODE	(3) CAGEC	(4) PART NUMBER	(5) DESCRIPTION AND USABLE ON CODES (UOC)	(6) QTY
				GROUP 01 FRAME ASSEMBLY FIGURE 01 FRAME ASSEMBLY	
1	PAOOO	81337	5-4-7582-1	FRAME ASSEMBLY.....	1
2	XBOZZ	81337	5-4-7585-1	HUB ASSEMBLY	1
3	XDOZZ	81337	5-4-7589-1	PIN. FRAME.....	33
4	XDOZZ	81337	5-4-7599-1	RING. SPLIT	33
5	XDOZZ	81337	5-4-7602-1	SNAP. SAFETY SPRING	1
6	XDOZZ	96906	MS51956-59	SCREW. SLOT. PAN HEAD	8
7	XDOZZ	81337	5-4-7593-1	POLE. FRAME. SHORT.....	8
8	XDOZZ	81337	5-4-7586-1	POLE. FRAME. LONG	4
9	XDOZZ	81337	5-4-7587-1	POLE & HOOK ASSY	4
10	XBOZZ	81337	5-4-7590-1	SLEEVE. BOTTOM. POLES	4
11	XDOZZ	81337	5-4-7591-1	SLEEVE. FRAME. JOINT.....	4
12	XDOZZ	81337	5-4-7592-2	CABLE ASSY. POLE.....	8
13	XAOZZ	81349	MIL-W-83420TYICO MPB	WIRE ROPE, TYI. COMPB	V
14	XAOZZ	81337	5-4-7598-1	SLEEVE. OVAL.....	1
15	XAOZZ	81337	5-4-7597-1	SLEEVE. ROUND	1
16	XAOZZ	81337	5-4-76O3-1	WASHER. CABLE.....	1
17	XDOZZ	81337	5-4-7591-2	SLEEVE. FRAME. JOIN I.....	4
18	XDOZZ	81337	5-4-7592-1	CABLE ASSY. POLE.....	4
19	XAOZZ	81349	MIL-W-83420TYICO MPB	WIRE ROPE. TYI. COMPB	1
20	XAOZZ	81337	5-4-7598-1	SLEEVE. OVAL..... UOCC:FDR	1
21	XAOZZ	81337	5-4-7597-1	SLEEVE. ROUND ..... UGC:FDR	1
22	XAOZZ	81337	5-4-7603-1	WASHER. CABLE ..... UOC: FDR	I
23	XDOZZ	81337	5-4-7601-1	SPRING. CYLINDRICAL	12
24	XDOFF	81337	5-4-7604-1	BAG AS SY. FRAME	1
25	PAOZZ	81348	V-T-285TYICLISUB CLBCOLODS1SZE	THREAD. POLYESTER	V
26	XBFZZ	81349	MIL-C-20696	CLOTH.....	1
27	MFFZZ	81337	5-4-7604-1-2	WEBBING. TEXTILE. WOV MAKE FROM..... WEBBING. TEXTILE. P/N MIL-W-4088. TYPE XVII. CL2. 1INWIDE. DD7. CUT3IN	2
28	XDOZZ	81349	MIL-B-543TYVCL3 SIZE 1 IN	BUCKLE. QUICK RELEAS.....	2
29	MFFZZ	81337	5-4-7604-1-4	CORD. FIBROUS. POLYES MAKE FROM..... CORD. POLY. SOLBRAID. DIA 1/BIN. CAMOGREEN483. CUT14IN	2
30	MFFZZ	81337	5-4-7604-1-3	WEBBING. TEXTILE. WOV MAKE FROM..... WEBBING. TEXTILE. P/N MIL-W-4088. TYPE ..... XVII. CL2. IIN. OD7. CUT18-1/4IN.	2
31	MFFZZ	81337	5-4--7604-1-5	CORD. FIBROUS. POLYES MAKE FROM..... CORD. POLY. SOLBRAID. DIA 1/8IN. CAMOGREEN483;CUT36IN	2
				END OF FIGURE	

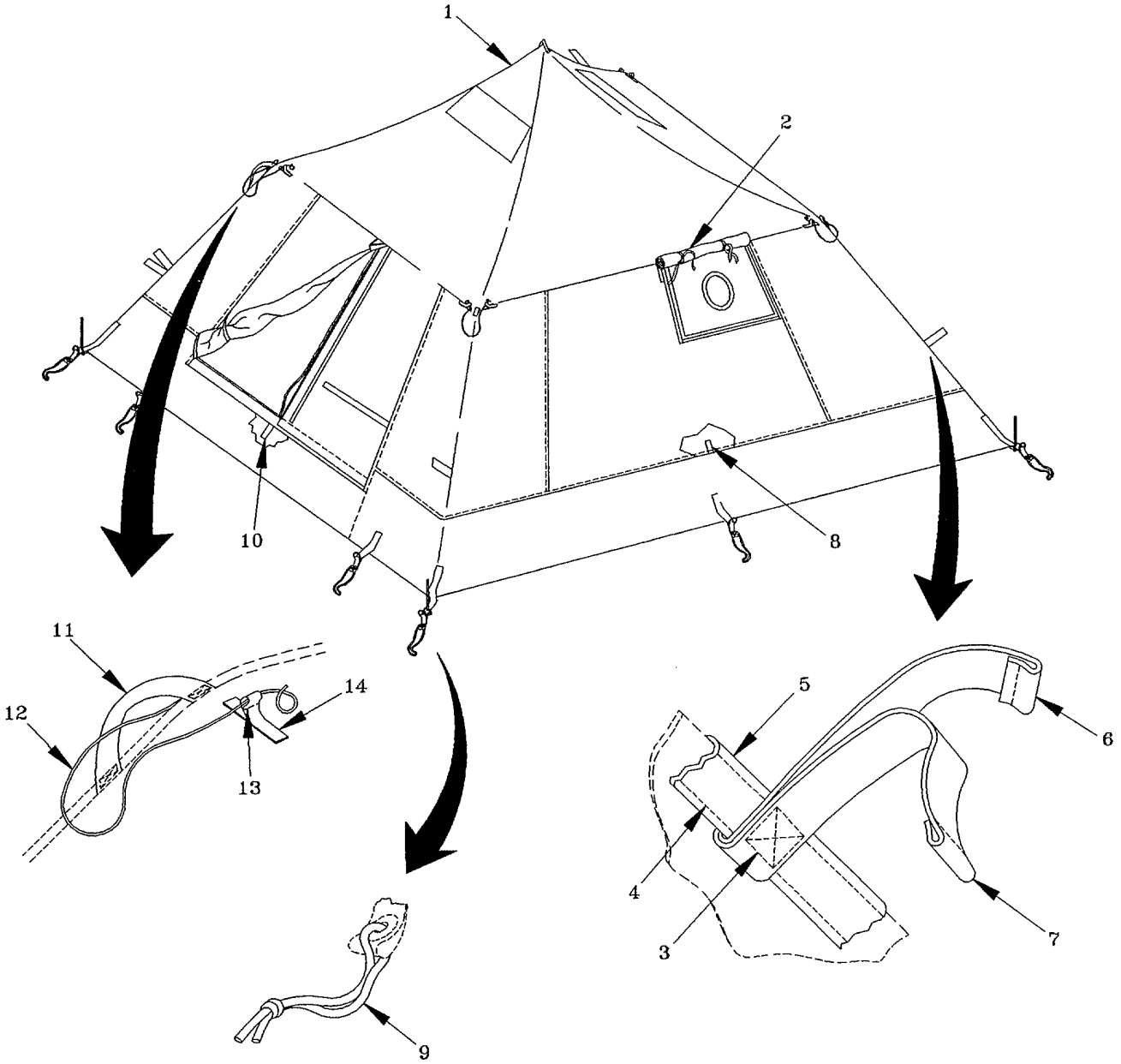

Figure 2. TENT BODY ASSEMBLY (Sheet 1 of 10)

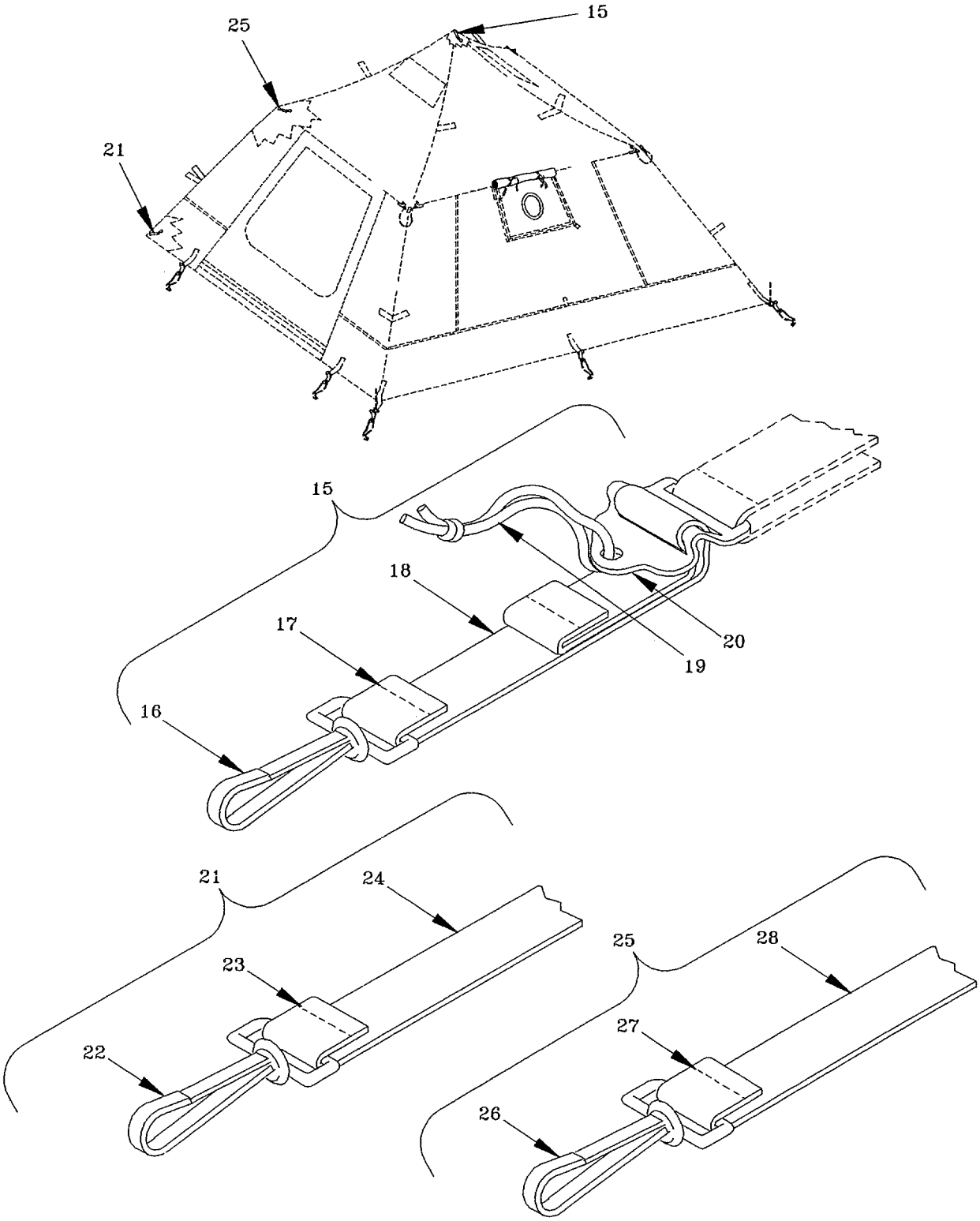

Figure 2. TENT BODY ASSEMBLY (Sheet 2 of 10)

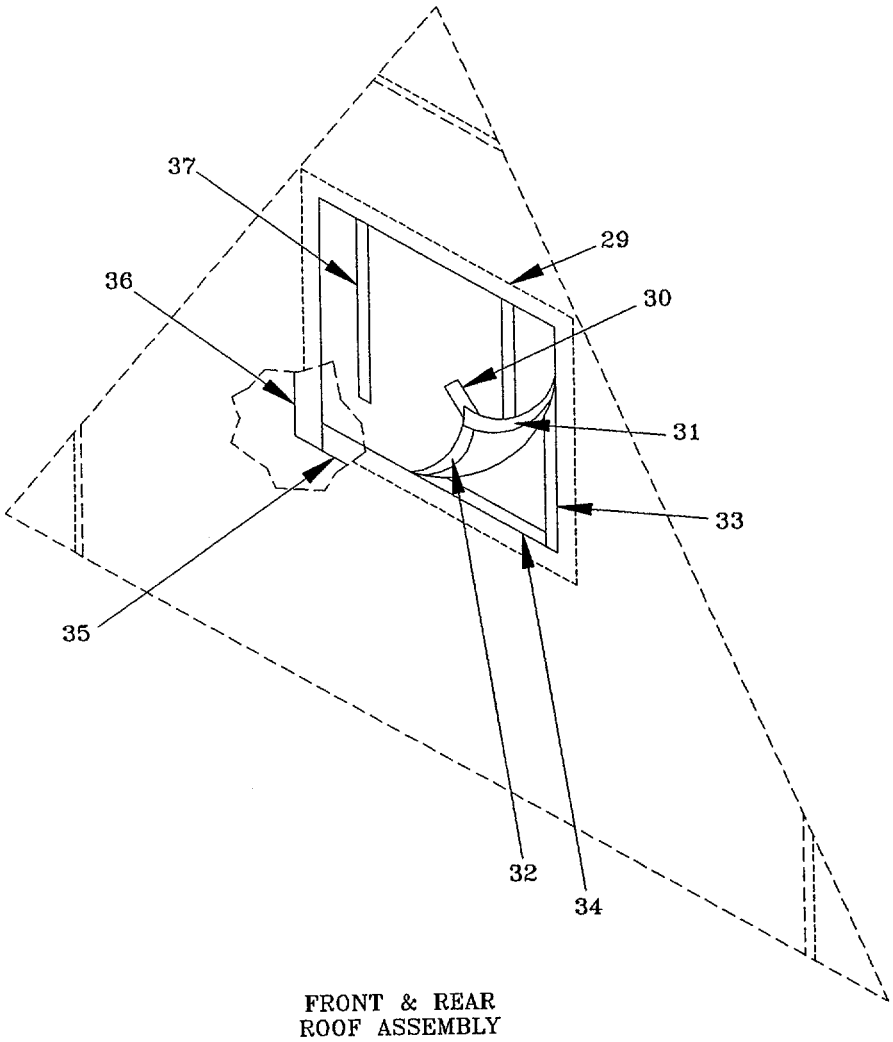

Figure 2. TENT BODY ASSEMBLY (Sheet 3 of 10)

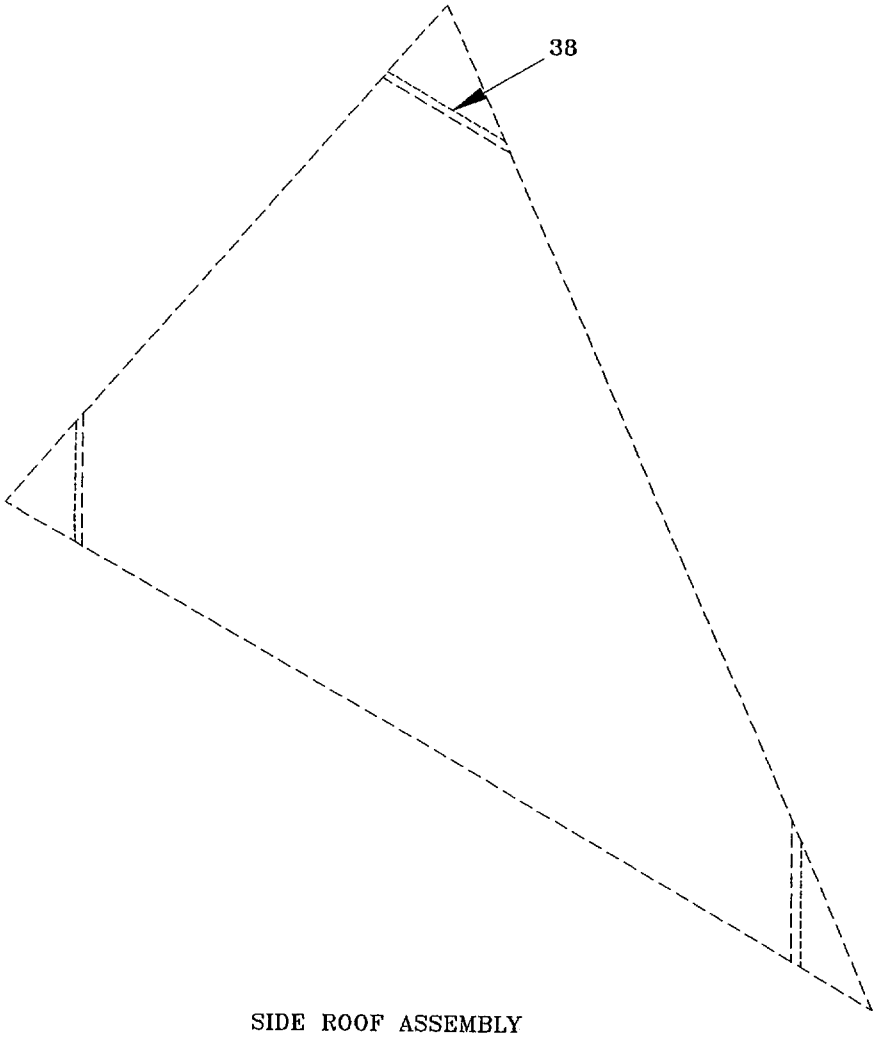

SIDE ROOF ASSEMBLY

Figure 2. TENT BODY ASSEMBLY (Sheet 4 of 10)

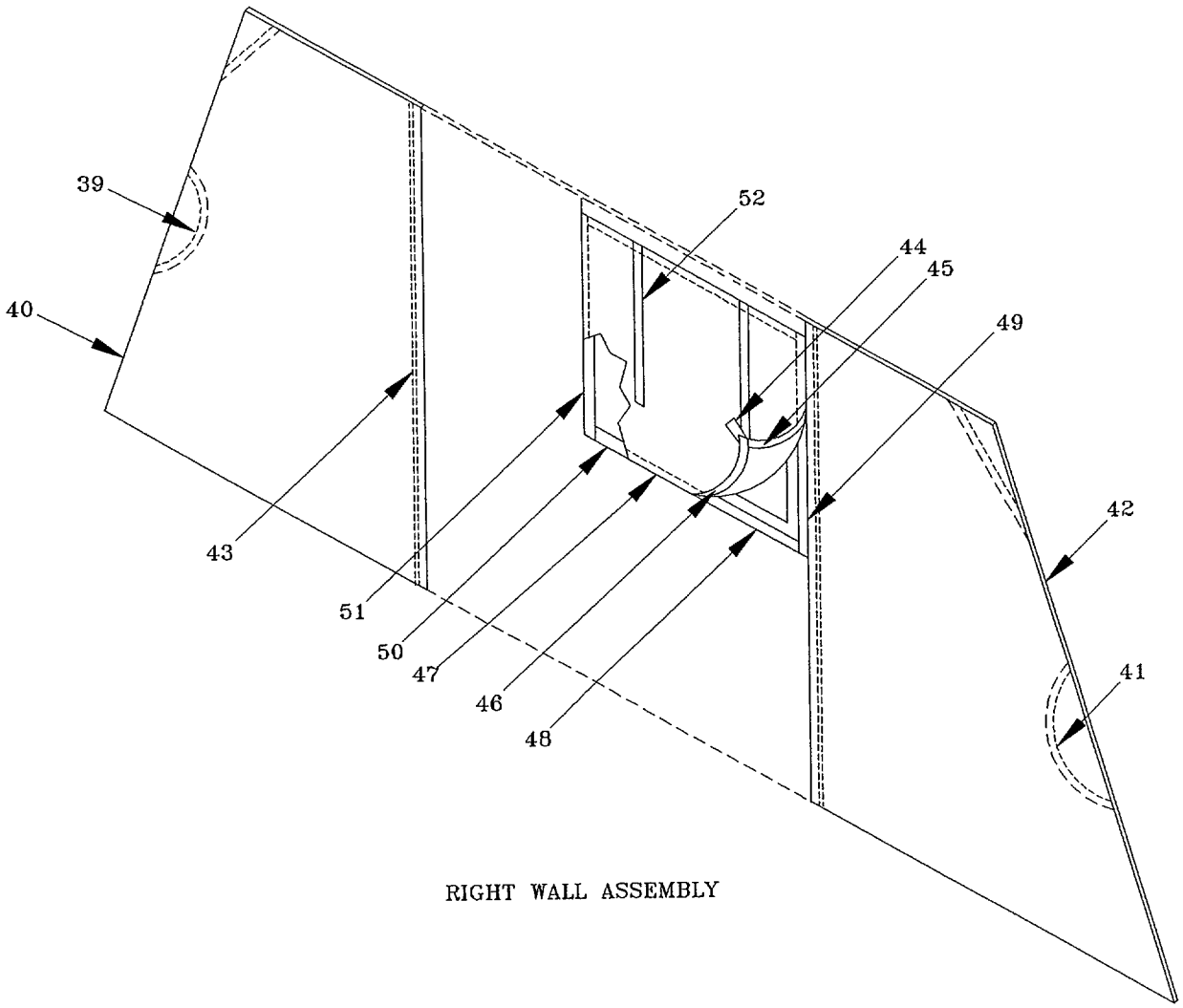

Figure 2. TENT BODY ASSEMBLY (Sheet 5 of 10)

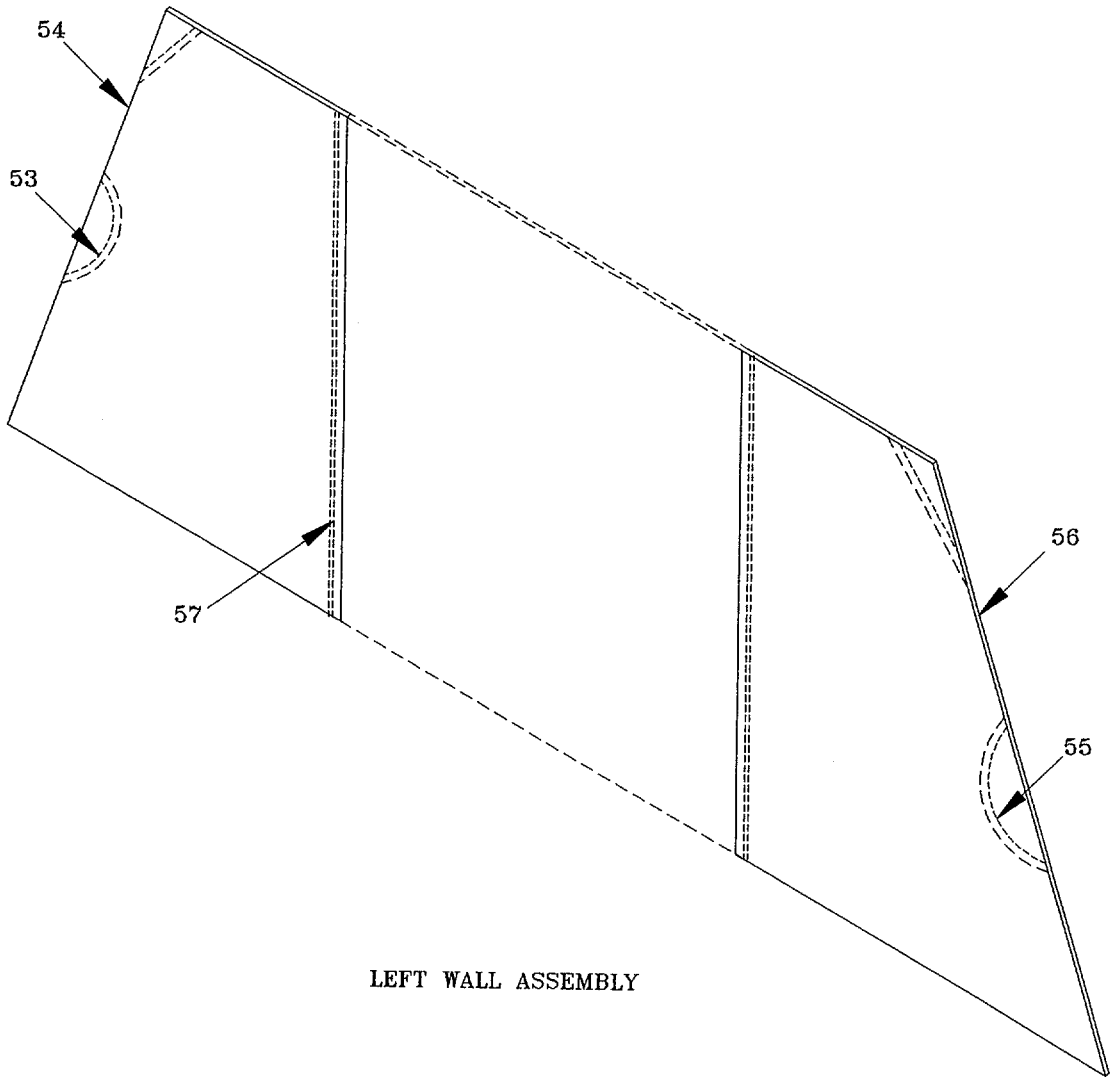

Figure 2. TENT BODY ASSEMBLY (Sheet 6 of 10)

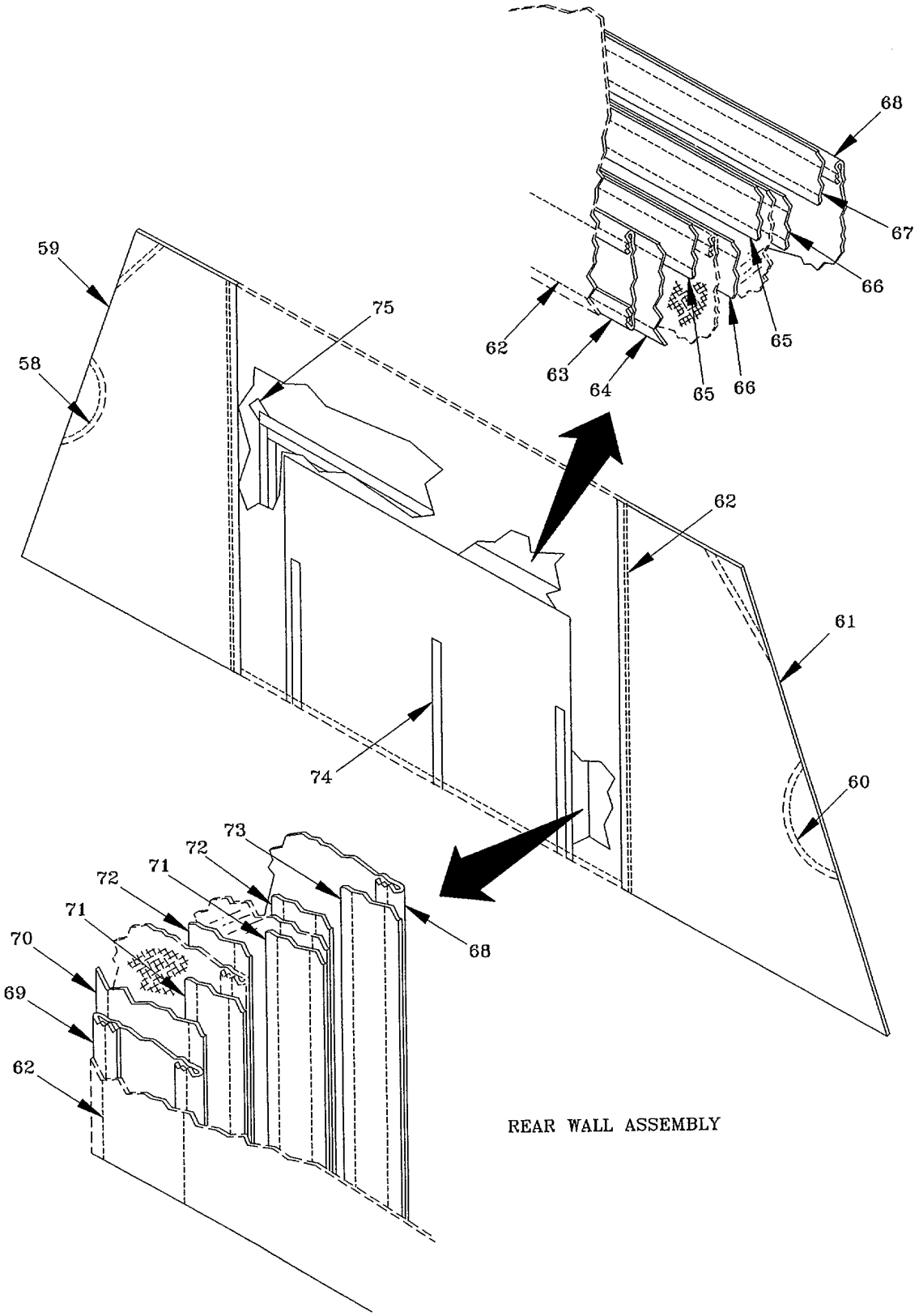

Figure 2. TENT BODY ASSEMBLY (Sheet 7 of 10)

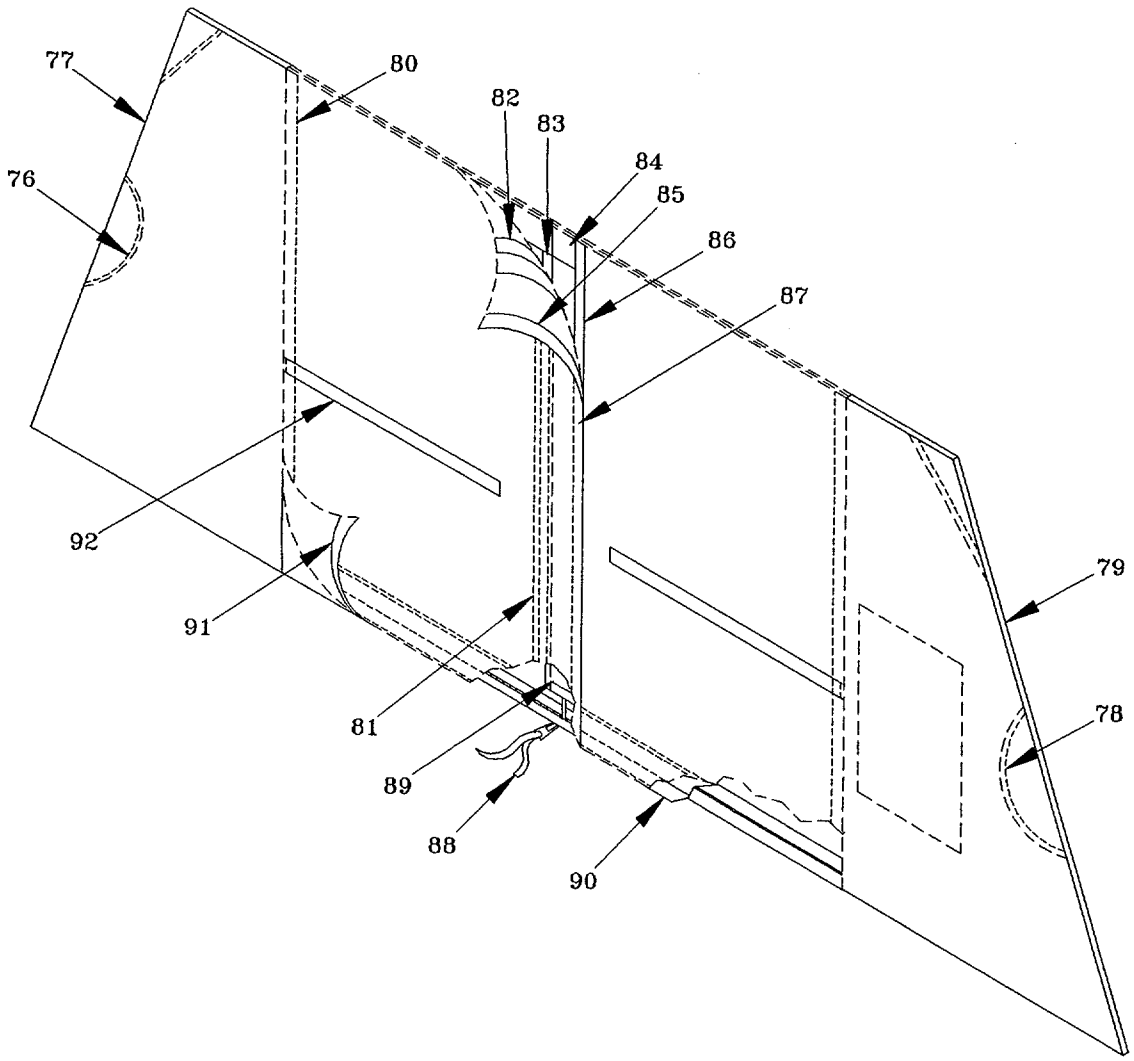

Figure 2. TENT BODY ASSEMBLY (Sheet 8 of 10)

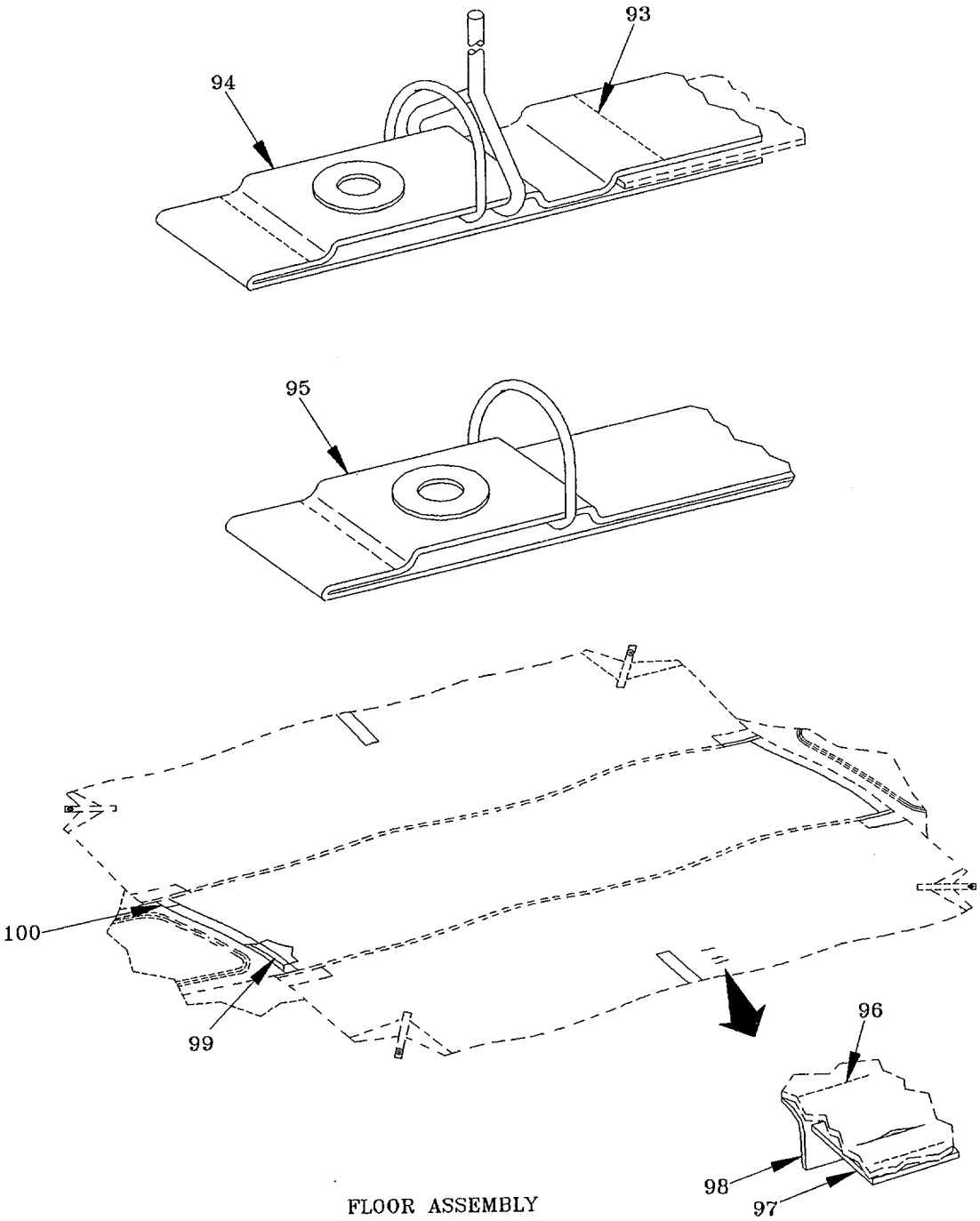

Figure 2. TENT BODY ASSEMBLY (Sheet 9 of 10)

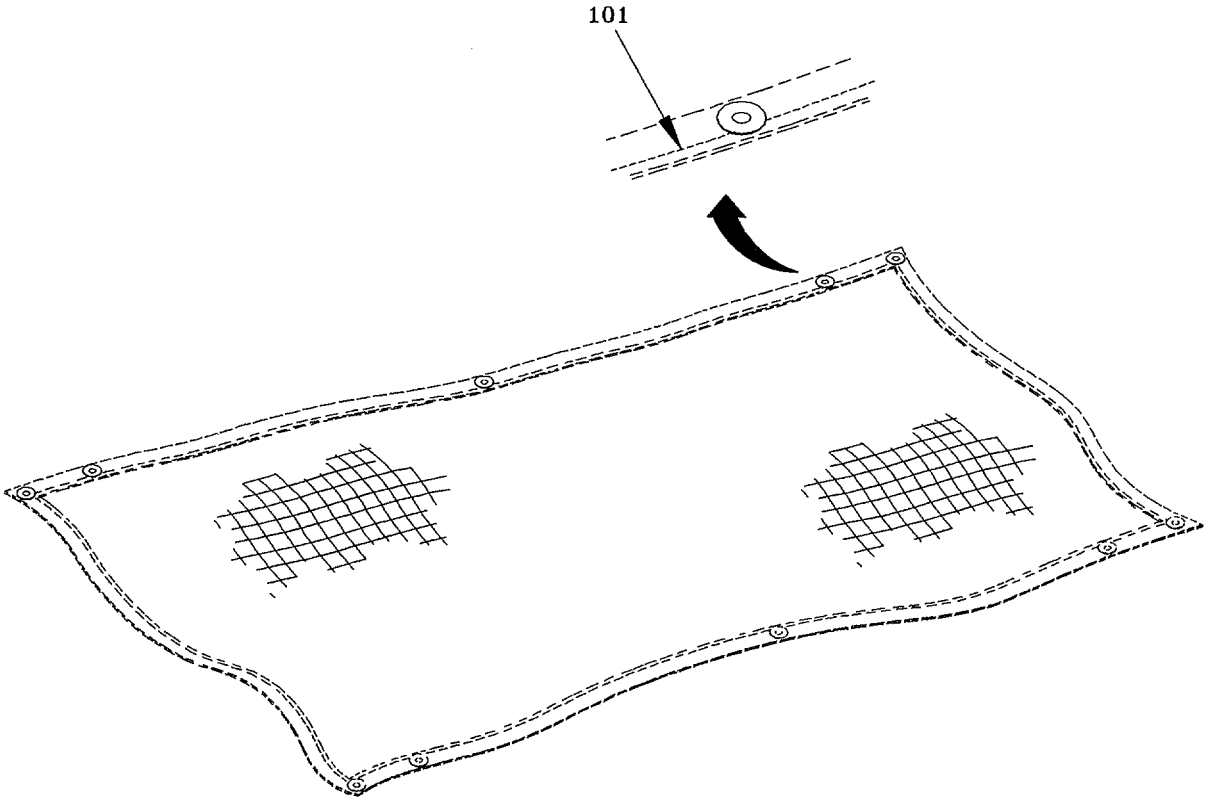

GEAR LOFT ASSEMBLY

Figure 2. TENT BODY ASSEMBLY (Sheet 10 of 10)

(1) ITEM NO	(2) SMR CODE	(3) CAGEC	(4) PART NUMBER	(5) DESCRIPTION AND USABLE ON CODES (UOC)	(6) QTY
				GROUP 02 TENT BODY ASSEMBLY FIGURE 02 TENT BODY ASSEMBLY	
1	XBOFF	81337	M5--4-7LI3-1	TENT BODY ASSEMBLY.....	1
2	XBFZZ	81349	MIL-C-44423CL1	CLOTH. COATED	1
3	PAOZZ	81348	V-T-285TYIICL1SU BCLECOLODS1SZFF	THREAD. POLYESTER V	
4	PAOZZ	81348	V-T-285TYIICL1SU BCLBCOLODS1SZE	THREAD. POLYESTER V	
5	MFFZZ	81337	M5-4-7613-21	TAPE. TEXTILE MAKE FROM TAPE..... V TEXTILE. COTTON. P/N MIL-T-43566, TYI. CL4. 1IN WIDE. OD7. CUT 4IN	
6	MFFZZ	81337	M5-4-7613-16	FASTENER TAPE. HOOK MAKE FROM ..... FASTENE:R TAPE. HOOK. P/N MIL-F-21840, TYII. CL3, 2IN WIDE. GREEN3422. CUT 7-1/ 2 IN	4
7	MFFZZ	81337	M5-4-7613-15	FASTENER TAPE, LOOP MAKE FROM..... FASTENER TAPE, LOOP, P/N MIL-F-21840, TYII, CL3, 2IN WIDE, GREEN3422,CUT 7-1/ 2IN	4
8	MFFZZ	81337	M5-4-7613-24	TAPE,TEXTILE MAKE FROM TAPE,..... V TEXTILE,COTTON,P/N MIL-T-43566,TYI, CL4,1/2IN WIDE,0D7,CUT 4IN	
9	MFFZZ	81337	M5-4-7613-18	ROPE,MANILA MAKE FROM ROPE,MANILA,..... P/N MIL-R-1670,TYI,CL2,1/4IN DIA, CUT 24IN	9
10	MFFZZ	81337	M5-4-7613-12	FASTENER,TAPE,LOOP MAKE FROM..... FASTENER TAPE,LOOP,P/N MIL-F-21840, TYII,CL3,1IN WIDE,GREEN3422,CUT4IN	3
11	MFFZZ	81337	5-4-7616-14	WEBBING,TEXTILE MAKE FROM WEBBING,..... TEXTILE,P/N MIL-W-4088,TYPE VIIB, CL2,2IN WIDE,0D7,CUT AS REQ.....	5
12	MFFZZ	81337	5-4-7684-1	ACCESSORY CORD MAKE FROM CORD,6MM DIA,P/N5-4-7684-1,CUT 3IN	5
13	PAOZZ	81348	V--T-285TYICL1SUB CLBCOLODS1SZE	THREAD,POLYESTER V	
14	MFFZZ	81337	5-4-7618-1-1	WEBBING,TEXTILE MAKE FROM ..... WEBBING,TEXTILE,P/N MIL-W-4088,TYPE XVII,CL2,1IN WIDE,0D7,CUT AS REQ	1
15	XAFZZ	81337	5-4-7644-1	HOOK ASSY,CTR,ADJST	1
16	XAOZZ	81349	MILS43770/1CWBC3	SNAP HOOK,WIRE BODY	1
17	PAOZZ	81348	V-T-285TYIICLlSU BCLBCOLODS1SZE	THREAD,POLYESTER V	
18	MFFZZ	81337	5-4-7644-3	TAPE,TEXTILE MAKE FROM TAPE,..... V TEXTILE,P/N M5038-III-2,1IN WIDE, 0D7 ,CUT AS REQ.....	
19	MFFZZ	81337	5-4-7644-4	CORD,FIBROUS,POLY MAKE FROM CORD, ... V POLY,SOLBRAID,P/N MIL-C-43256, 1/8IN DIA,CAMOGREEN483,CUT 14IN	
20	XAOZZ	81349	MIL-B-543TYVCL3 SIZEL1IN	BUCKLE,QUICK RELEAS.....	1
21	XAFZZ	81337	5-4-7616-2	SNAP HOOK ASSY	4

(1) ITEM NO	(2) SMR CODE	(3) CAGEC	(4) PART NUMBER	(5) DESCRIPTION AND USABLE ON CODES (UOC)	(6) QTY
22	XAOZZ	81349	MILS43770/1CWBC3	SNAP HOOK,WIRE BODY.....	1
23	PAOZZ	81348	V-T-285TYIICL1SU BCLBCOLODS1SZE	THREAD, POLYESTER V	
24	MFFZZ	81337	5-4-7616-2-2	TAPE,TEXTILE,NYLON MAKE FROM ..... TAPE,TEXTILE,P/N M5038-IV-2,1 IN WIDE,OD7,CUT AS REQ	1
25	XAFZZ	81337	5-4-7616-1	SNAP HOOK ASSY	8
26	XAOZZ	81349	MILS43770/1CWBC3	SNAP HOOK,WIRE BDY	1
27	PAOZZ	81348	V-T-285TYIICL1SU BCLBCOLODS1SZE	THREAD,POLYESTER V	
28	MFFZZ	81337	5-4-7616-1-2	TAPE,TEXTILE,NYLON MAKE FROM ..... TAPE,TEXTILE,MP/N 5038-III-2,1IN WIDE,OD7,CUT AS REQ	1
29	PAOZZ	81348	V-T-285TYICL1SUB CLBCOLODS1SZE	THREAD,POLYESTER. V	
30	MFFZZ	81337	M5-4-7639-10	TAPE,TEXTILE MAKE FROM TAPE, ... TEXTILE,COTTON,P/N MIL-T-43566,TYI, CL4,3/4IN WIDE,OD7,CUT 4IN.....	2
31	MFFZZ	81337	M5-4-7639-8	FASTENER TAPE,HOOK MAKE FROM ..... FASTENER TAPE,HOOK,P/N MIL-F-21840, TYII,CL3,2IN WIDE,GREEN3422,CUT 16IN	4
32	MFFZZ	81337	M5-4-7639-14	FASTENER TAPE,HOOK MAKE FROM ..... FASTENER TAPE,HOOK,P/N MIL-F-21840, TYII,CL3,2IN WIDE,GREEN3422,CUT 22IN	2
33	MFFZZ	81337	MS-4-7639-7	FASTENER TAPE,LOOP MAKE FROM..... FASTENER TAPE,LOOP,P/N MIL-F-21840, TYII,CL3,2IN WIDE,GREEN3422,CUT 16IN	4
34	MFFZZ	81337	M5-4-7639-15	FASTENER TAPE,LOOP MAKE FROM..... FASTENER TAPE,LOOP,P/N MIL-F-21840, TYII,CL3,2IN WIDE,GREEN3422,CUT 22IN	2
35	XBFZZ	81349	MIL-C-44423CL1	CLOTH,COATED	2
36	XBFZZ	81349	MIL-C-44423CL1	CLOTH,COATED	4
37	MFFZZ	81337	MS-4-7639-9	TAPE,TEXTILE MAKE FROM TAPE, ... TEXTILE,COTTON,P/N MIL-T-43566,TYI, CL4,3/4IN WIDE,OD7,CUT 24IN	2
38	PAOZZ	81348	V-T-285TYICL1SUB CLBCOLODS1SZE	THREAD,POLYESTER V	
39	PAOZZ	81348	V-T-285TYIICL1SU BCLBCOLODS1SZE	THREAD,POLYESTER V	
40	XBFZZ	81349	MIL-C-44423CL1	CLOTH,COATED	1
41	PAOZZ	81348	V-T-285TYIICL1SU BCLBCOLODS1SZE	THREAD,POLYESTER V	
42	XBFZZ	81349	MIL-C-44423CL1	CLOTH,COATED	1
43	PAOZZ	81348	V-T-285TYIICL1SU BCLBCOLODS1SZE	THREAD,POLYESTER V	
44	MFFZZ	81337	M5-4-7634-13	TAPE,TEXTILE MAKE FROM TAPE, ... TEXTILE,COTTON,P/N MIL-T-43566,TYI, CL4,3/4IN WIDE,OD7,CUT 4IN	2
45	MFFZZ	81337	M5-4-7634-9	FASTENER TAPE,HOOK MAKE FROM ..... FASTENER TAPE,HOOK,P/N MIL-F-21840, TYII,CL3,1IN WIDE,OG106,CUT17-3/4IN.	2
46	MFFZZ	81337	M5-4-7634-10	FASTENER TAPE,HOOK MAKE FROM	1

(1) ITEM NO	(2) SMR CODE	(3) CAGEC	(4) PART NUMBER	(5) DESCRIPTION AND USABLE ON CODES (UOC)	(6) QTY
				FASTENER TAPE,HOOK,P/N MIL-F-218YII, CL3,1IN WIDE,CUT 20IN	
47	XBFZZ	81349	MIL-C-44423CL1	CLOTH,COATED	1
48	MFFZZ	81337	M5-4-7634-8	FASTENER TAPE,LOOP MAKE FROM FASTENER TAPE,LOOP,P/N MIL-F-21840, TYII,CL3,lIN WIDE,OG106,CUT 20IN	1
49	MFFZZ	81337	M5-4-7634-7	FASTENER TAPE,LOOP MAKE FROM FASTENER TAPE,LOOP,P/N MIL-F-21840, TYII,CL3,1IN WIDE,OG106,CUT 17-3/4IN	2
50	XBFZZ	81349	MIL-C-44423CL1	CLOTH,COATED	1
51	XBFZZ	81349	MIL-C-44423CL1	CLOTH,COATED	2
52	MFFZZ	81337	M5-4--7634-12	TAPE,TEXTILE MAKE FROM TAPE TEXTILE,COTTON,P/N MIL-T-43566,TYI, CL4,3/4IN WIDE,OD7,CUT 26IN..	2
53	PAOZZ	81348	V-T-285TYICLISUB	THREAD,POLYESTER V CLBCOLODS1SZE	
54	XBFZZ	81349	MIL-C-44423CL1	CLOTH,COATED	1
55	PAOZZ	81348	V-T-285TYICL1SUB CLBCOLODS1SZE	THREAD,POLYESTER V	
56	XBFZZ	81349	MIL-C-44423CL1	CLOTH,COATED	1
57	PAOZZ	81348	V-T-285TYIICL1SU BCLBCOLODS1SZE	THREAD, POLYESTER V	
58	PAOZZ	81348	V-T-285TYICL1SUB CLBCOLODS1SZE	THREAD,POLYESTER V	
59	XBFZZ	81349	MIL-C-44423CL1	CLOTH,COATED	1
60	PAOZZ	81348	V-T-285TYIICL1SU BCLBCOLODS1SZE	THREAD,POLYESTER V	
61	XBFZZ	81349	MIL-C-44423CL1	CLOTH,COATED V	
62	PAOZZ	81348	V-T-285TYICL1SUB CLBCOLODS1SZE	THREAD,POLYESTER V	
63	XBFZZ	81349	MIL-C-44423CL1	CLOTH,COATED	1
64	MFFZZ	81337	MS-4-7629-9	FASTENER TAPE,LOOP MAKE FROM FASTENER TAPE,LOOP,P/N MIL-F-21840, TYII,CL3,2IN WIDE,GREEN3422,CUT 35IN	1
65	MFFZZ	81337	M5-4-7629-11	FASTENER TAPE,HOOK MAKE FROM FASTENER TAPE,HOOK,P/N MIL-F-21840, TYII,CL3,1IN WIDE,OG106,CUT 35IN	2
66	MFFZZ	81337	M5-4-7629-12	FASTENER TAPE,LOOP MAKE FROM FASTENER TAPE,LOOP,P/N MIL-F-21840, TYII,CL3,1IN WIDE,OG106,CUT 35IN	2
67	MFFZZ	81337	M5-4-7629-15	FASTENER TAPE,HOOK MAKE FROM FASTENER TAPE,HOOK,P/N MIL-F-21840, TYII,CL3,1IN WIDE,OD7,CUT 35IN	2
68	XBFZZ	81349	MIL-C-44423CL1	CLOTH,COATED	1
69	XBFZZ	81349	MIL-C-44423CL1	CLOTH,COATED	2
70	MFZZ	81337	M5-4-7629-10	FASTENER TAPE,LOOP MAKE FROM FASTENER TAPE,LOOP,P/N MIL-F-21840, TYII,CL3,1IN WIDE,0G106,CUT 18-1/2IN	2
71	MFFZZ	81337	M5-4-7629-13	FASTENER TAPE,HOOK MAKE FROM FASTENER TAPE,HOOK,P/N MIL-F-21840, TYII,CL3,1IN WIDE,OG106,CUT 19IN	4
72	MFFZZ	81337	M5-4-7629-14	FASTENER TAPE,LOOP MAKE FROM	4

(1) ITEM NO	(2) SMR CODE	(3) CAGEC	(4) PART NUMBER	(5) DESCRIPTION AND USABLE ON CODES (UOC)	(6) QTY
				FASTENER TAPE,LOOP,P/N MIL-F-21840 TYII,CL3,1IN WIDE,OG106,CUT 19IN.	
73	MFFZZ	81337	M5-4-7629-16	FASTENER TAPE,HOOK MAKE FROM ..... FASTENER TAPE,HOOK,P/N MIL-F-21840, TYII,CL3,1IN WIDE,OG106,CUT 19-1/2IN	1
74	MFFZZ	81337	M5-4-7629-18	TAPE,TEXTILE MAKE FROM TAPE, ... TEXTILE,COTTON,P/N MIL-T-43566,TYI, CL4,3/4IN WIDE,OD7,CUT 12IN	12
75	MFFZZ	81337	M5-4-7629-19	TAPE,TEXTILE MAKE FROM TAPE, ... TEXTILE,COTTON,P/N MIL-T-43566,TYI, CL4,3/4IN WIDE,OD7,CUT 4IN	6
76	PAOZZ	81348	V-T-285TYICLISUB CLBCOLODS1SZE	THREAD,POLYESTER	V
77	XBFZZ	81349	MIL-C-44423CL1	CLOTH,COATED	V
78	PAOZZ	81348	V-T-285TYICLISUB CLBCOLODS1SZE	THREAD,POLYESTER	1
79	XBFZZ	81349	MIL-C-44423CL1	CLOTH,COATED	V
80	PAOZZ	81348	V-T-285TYIICL1SU BCLBCOLODSLSTFF	THREAD,PLYESTER.	V
83	MFFZZ	81337	MS-4-7623-12	FASTENER TAPE,LOOP MAKE FROM..... FASTENER TAPE,LOOP,P/N MIL-F-21840, TYII,CL3,1IN WIDE,OG106,CUT 36IN.	1
84	MFFZZ	81337	M5-4-7623-15	WEBBING,TEXTILE MAKE FROM ..... WEBBING,TEXTILE,P/N MIL-W-4088,TYPE VIIB,CL2,2IN WIDE,OD7,CUT 2-1/2IN.	2
85	MFFZZ	81337	M5-4-7623-9	FASTENER,TAPE,HOOK MAKE FROM ..... FASTENER TAPE,P/N HOOK,MIL-F-21840, TYIICL31IN WIDE,GREENOG106,CUT 361N.	1
86	MFFZZ	81337	M5-4-7623-10	FASTENER TAPE,LOOP MAKE FROM..... FASTENER TAPE,LOOP,P/N MIL-F-21840, TYII,CL3,1IN WIDE,OG106,CUT 36IN	1
87	XBFZZ	81349	MIL-C-44423CL1	CLOTH,COATED	1
88	MFFZZ	81337	M5-4-7623-8	WEBBING,TEXTILE MAKE FROM 6 WEBBING,TEXTILE,P/N MIL-W-44049,TYI, CL4,3/8IN WIDE,OD7,CUT 17IN.....	
89	XBFZZ	81349	MIL-C-44423CL1	CLOTH,COATED	1
90	MFFZZ	81337	M5-4-7623-14	FASTENER TAPE,HOOK MAKE FROM ..... FASTENER TAPE,HOOK,P/N MIL-F--21840, TYII,CL3,1IN WIDE,OG106,CUT 24IN.	1
91	MFFZZ	81337	M5-4-7623-13	FASTENER TAPE,HOOK MAKE FROM ..... FASTENER TAPE,HOOK,P/N MIL-F-21840, TYII,CL3,1IN WIDE,OG106,CUT 27-1/2IN	1
81	PAOZZ	81348	V-T-285TYICL1SUB CLBCOLODS1SZE	THREAD,POLYESTER V	
92	MFFZZ	81337	M5-4-7623-16	TAPE,TEXTILE MAKE FROM TAPE, ... TEXTILE,COTTON,P/N MIL-T-43566,TYI, CL4,3/4IN WIDE,OD7,CUT 20IN	6
93	PAOZZ	81348	V-T-285TYIICL]SU BCLBCOLODS1SZE	THREAD,POLYESTER V	
94	XDFZZ	81337	5-4-7617-1	WEBBING,ANCHOR ASSY	4
95	XDFZZ	81337	5-4-7617-2	WEBBING,ANCHOR ASSY	6
96	PAOZZ	81348	V-T-285TYIICL1SU	THREAD,POLYESTER V	

(1) ITEM NO	(2) SMR CODE	(3) CAGEC	(4) PART NUMBER	(5) DESCRIPTION AND USABLE ON CODES (UOC)	(6) QTY
			BCLBCOLODSISZFF		
97	MFFZZ	81337	M5-4-7614-10	FASTENER TAPE,HOOK MAKE FROM ..... FASTENER TAPE,HOOK,P/N MIL-F-21840, TYII,CL3,1IN WIDE,GREEN3422,CUT 3IN.	1
98	MFFZZ	81337	M5-4-7614-9	FASTENER TAPE,LOOP MAKE FROM..... FASTENER TAPE,LOOP,P/N MIL-F-21840, TYII,CL3,2IN WIDE,GREEN3422,CUT 3IN.	1
99	MFFZZ	81337	M5-4-7614-15	FASTENER TAPE,LOOP MAKE FROM..... FASTENER TAPE,LOOP,P/N MIL-F-21840, TYII,CL3,1IN WIDE,GREEN3422,CUT 51IN	1
100	MFFZZ	81337	M5-4-7614-17	WEBBING,TEXTILE MAKE FROM ..... WEBBING,TEXTILE,P/N MIL-W-4088,TYPE VIIB,CL2,0D7,2 IN WIDE,CUT 2-1/21N..	1
101	PAOZZ	81348	V-T-285TYIICLISU	THREAD,POLYESTER V	
			BCLBCOLODSISZE		
82	MFFZZ	81337	M5-4-7623-11	FASTENER TAPE,HOOK MAKE FROM ..... FASTENER TAPE,HOOK,P/N MIL-F-21840, TYII,CL3,1IN WIDE,OG106,CUT 36IN	1

END OF FIGURE

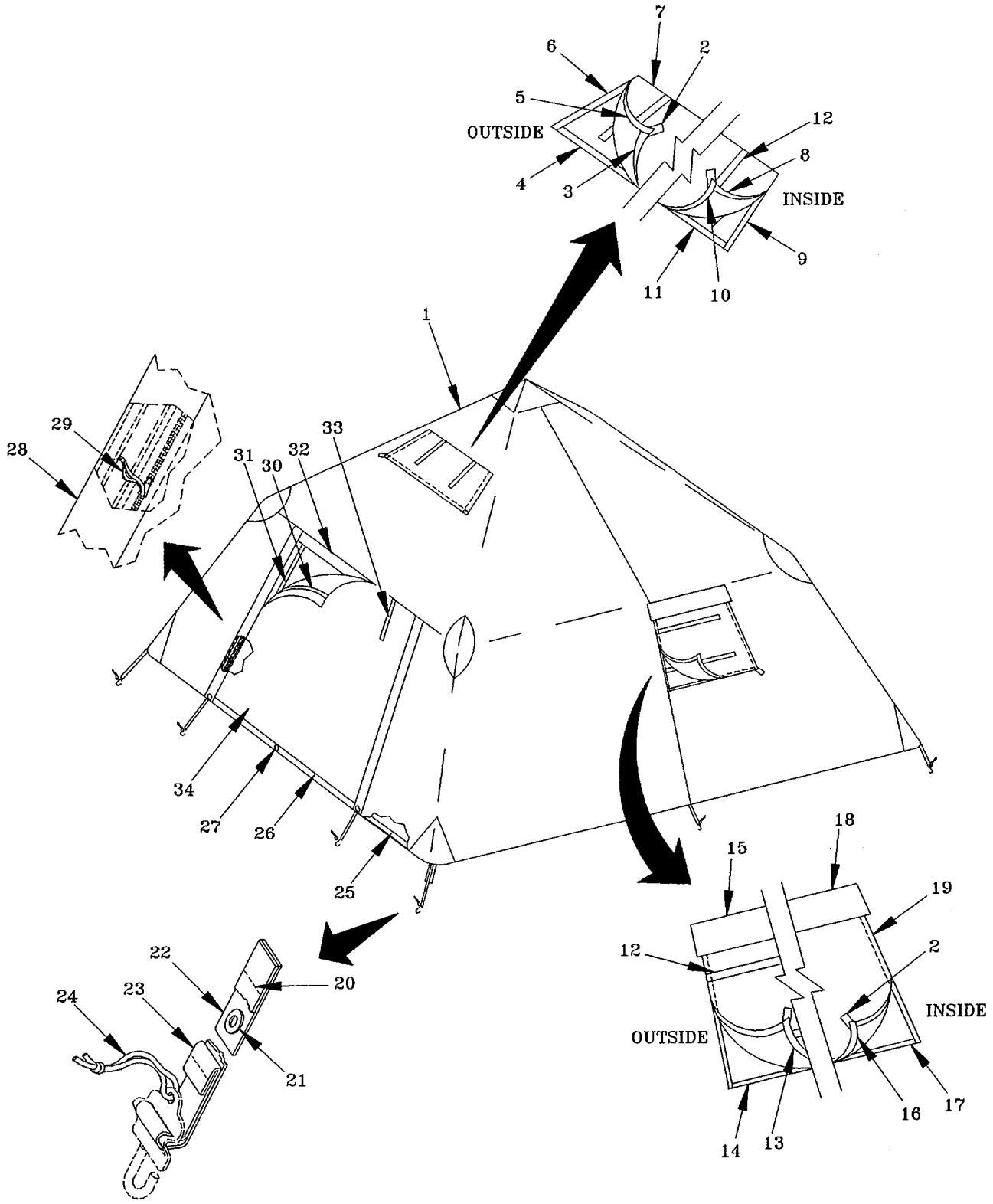

Figure 3. FLY ASSEMBLY (Sheet 1 of 2)

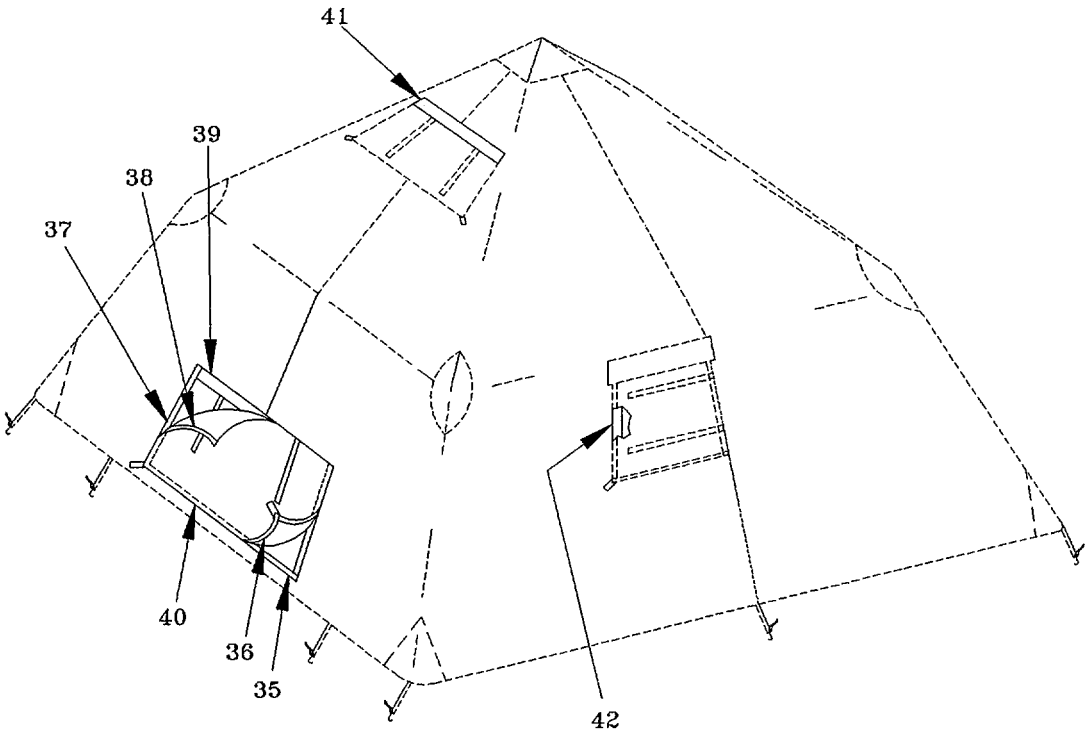

Figure 3. FLY ASSEMBLY (Sheet 2 of 2)

(1) ITEM NO	(2) SMR CODE	(3) CAGEC	(4) PART NUMBER	(5) DESCRIPTION AND USABLE ON CODES (UOC)	(6) QTY
				GROUP 03 FLY ASSEMBLY FIGURE 03 FLY ASSEMBLY	
1	XBOFF	81337	M5-4-7649-1	FLY ASSEMBLY)TYPE I ..... UOC:FDR	1
1	XBUZZ	81337	MS-4-7649-2	FLY ASSEMBLY,TYP II..... UOC:FDU	1
2	MFFZZ	81337	M5-4-7649-1-38	TAPE,TEXTILE MAKE FROM TAPE, ... TEXTILE,COTTON,P/N MIL-T-43566,TYI, CL4,3/4IN WIDE,OD7,CUT 4IN .N ..... UOC:FDR	22
2	MFFZZ	81337	M5-4-7649-2-38	TAPE,TEXTILE MAKE FROM TAPE, ... TEXTILE,COTTON,P/N MIL-T-43566,TYI, CL4,3/4IN WIDE,OD-7,CUT 4IN..... UOC:FDU	22
3	MFFZZ	81337	M5-4-7649-1-68	FASTENER TAPE,HOOK MAKE FROM ..... FASTENER TAPE,HOOK,P/N MIL-F-21840, TYII,CL3,21N WIDE,GREEN3422,CUT 18IN..... UOC:FDR	2
3	MFFZZ	81337	M5-4-7649-2-68	FASTENER TAPE,HOOK MAKE FROM ..... FASTENER TAPE,HOOK,P/N MIL-F-21840, TYII,CL3,2IN WIDE,GREEN3422,CUT 18IN..... UOC:FDU	2
4	MFFZZ	81337	M5-4-7649-1-67	FASTENER TAPE,LOOP MAKE FROM..... FASTENER TAPE,LOOP,P/N MIL-F-21840, TYII,CL3,2IN WIDE,GREEN3422,CUT 18IN ..... UOC:FDR	2
4	MFFZZ	81337	M5-4-7649-2-67	FASTENER TAPE,LOOP MAKE FROM..... FASTENER TAPE,LOOP,P/N MIL-F-21840, TYII,CL3,2IN WIDE,GREEN3422,CUT 18TN ..... UOC:FUU	2
5	MFFZZ	81337	M5-4-7649-1-40	FASTENER TAPE,HOOK MAKE FROM ..... FASTENER TAPE,HOOK,P/N MIL-F-21846, TYII,CL3,2IN WIDE,GREEN3422,CUT 20IN ..... UOC:FDR	4
5	MFFZZ	81337	MS-4-7649-2-40	FASTENER TAPE,HOOK MAKE FROM ..... FASTENER TAPE,HOOK,P/N MIL-F-21840, TYII,CL3,2IN WIDE,GREEN3422,CUT 20IN ..... UOC:FDU	4
6	MFFZZ	81337	M5-4-7649-1-41	FASTENER TAPE,LOOP MAKE FROM..... FASTENER TAPE,LOOP,P/N MIL-F-21840, TYII,CL3,2IN WIDE,GREEN3422,CUT 20IN ..... UOC:FDR	4
6	MFFZZ	81337	M5-4-7649-2-41	FASTENER TAPE,LOOP MAKE FROM..... FASTENER TAPE,LOOP,P/N MIL-F-21840, TYII,CL3,2IN WIDE,GREEN3422,CUT20 IN ..... UOC:FDU	4
7	XBFZZ	81349	MIL-C-44423CL2	CLOTH,COATED ..... UOC:FDR	4
7	XBFZZ	81349	MIL-C-44423CL3	CLOTH,COATED ..... UOC:FDU	4
8	MFFZZ	81337	M5-4-7649-1-65	FASTENER TAPE,HOOK MAKE FROM	4

(1) ITEM NO	(2) SMR CODE	(3) CAGEC	(4) PART NUMBER	(5) DESCRIPTION AND USABLE ON CODES (UOC)	(6) QTY
				FASTENER TAPE,HOOK,P/N MIL-F-21840, TYII,CL3,2IN WIDE,DESERTTAN459,CUT 20 I..... UOC:FDR	
8	MFFZZ	81337	M5-4-7649-2-65	FASTENER TAPE,HOOK MAKE FROM ..... FASTENER TAPE,HOOK,P/N MIL-F-21840, TYII,CL3,2IN WIDE,WHITE,CUT 20IN ..... UOC:FDU	4
9	MFFZZ	81337	M5-4-7649-1-66	FASTENER TAPE,LOOP MAKE FROM..... FASTENER TAPE,LOOP,P/N MIL-F-21840, TYII,CL3,2IN WIDE,DESERTTAN459,CUT 20IN ..... UOC:FDR	4
9	MFFZZ	81337	M5-4-7649-2-66	FASTENER TAPE,LOOP MAKE FROM..... FASTENER TAPE,LOOP,P/N MIL-F-21840, TYJI,CL3,2IN WIDE,WHITE,CUT 20XN ..... UOC:FDU	1
10	MFFZZ	81337	M5-4-7649-1-70	FASTENER TAPE,HOOK MAKE FROM ..... FASTENER TAPE,HOOK,P/N MIL-F-21840, TYII,CL3,21N WII)E,DESERTTAN459,CUT 18IN ..... UOC:FDR	2
10	MFFZZ	81337	M5-4-7649-2-70	FASTENER TAPE,HOOK MAKE FROM ..... FASTENER TAPE,HOOK,P/N MIL-F-21840, TYII,CL3,2IN WIDE,WHITE,CUT 18IN ..... UOC:FDU	2
11	MFFZZ	81337	M5-4-7649-1-69	FASTENER TAPE,LOOP MAKE FROM..... FASTENER TAPE,LOOP,P/N MIL-F-21840, TYII,CL3,21N WIiDE,DESERTTAN459,CUT 18IN ..... UOC:FDR	2
11	MFFZZ	81337	M5-4-7649-2-69	FASTENER TAPE,LOOP MAKE FROM..... FASTENER TAPE,LOOP,P/N MIL-F-21840, TYII,CL3,21N WIDE,DESERTTAN459, CUT18 IN ..... UOC:FDU	2
12	MFFZZ	81337	M5-4-7649-1-54	TAPE,TEXTILE MAKE FROM TAPE,..... TEXTILE,COTTON,P/N MIL-T-43566,TYI, CL4,3/4IN WIDE,OD7,CUT 261..... UOC:FDR	20
12	MFFZZ	81337	MS-4-7649-2-54	TAPE,TEXTILE MAKE FROM TAPE,..... TEXTILE,COTTON,P/N MIL-T-43566,TYI, CL4,3/4IN WIDE,OD7,CUT 24 IN..... UOC:FDU	20
13	MFFZZ	81337	M5-4-7649-1-50	FASTENER,TAPE,HOOK MAKE FROM FASTENER TAPE,HOOK,P/N MIL-F-21840, TYII,CL3,1IN WIDE,GREEN3422,CUT 20IN UOC:FDR	
13	XACZZ	81337	M5-4-7649-2-50	FASTENER TAPE,HOOK MAKE FROM ..... FASTENER TAPE,HOOK,P/N MIL-F-21840, TYII,CL3,1IN WIDE,GREEN3422,CUT 20IN UOC:FDU	10

(1) ITEM NO	(2) SMR CODE	(3) CAGEC	(4) PART NUMBER	(5) DESCRIPTION AND USABLE ON CODES (UOC)	(6) QTY
14	MFFZZ	81337	M5-4-7649-1-51	FASTENER,TAPE,LOOP MAKE FROM..... FASTENER TAPE,LODP,P/N MIL-F-21840, TYII,CL3,1IN WIDE,GREEN3422,CUT 20IN UOC:FDR	6
14	MFFZZ	81337	M5-4-7649-2-51	FASTENER TAPE,LOOP MAKE FROM..... FASTENER TAPE,LOOP,P/N MIL-F-21840, TYII,CL3,1IN WIDE,GREEN3422,CUT 20IN UOC: FDU	6
15	XBFZZ	81349	MIL-C-44423CL2	CLOTH,COATED,FLAME..... UOC:FDR	4
15	XBFZZ	81349	MIL-C-44423CL1	CLOTH, COATED ..... UOC:FDU	2
16	MFFZZ	81337	M5-4-7649-1-71	FASTENER TAPE,HOOK MAKE FROM ..... FASTENER TAPE,HOOK,P/N MIL-F-21840, TYII,CL3,1IN WIDE,DESERTTAN459,CUT 20 IN ..... UOC: FDR	2
16	MFFZZ	81337	M5-4-7649-2-71	FASTENER TAPE,HOOK MAKE FROM ..... FASTENER TAPE,HOOK,P/N MIL-F-21840, TYII,CL3,1IN WIDE,WHITE,CUT 20IN,... ..... UOC: FDU	2
17	MFFZZ	81337	M5-4-7649-1-72	FASTENER TAPE,LOOP MAKE FROM..... FASTENER TAPE,LOOP,P/N MIL-F-21840, TYII,CL3,1IN WIDE,DESERTTAN459,CUT 20 IN ..... UOC:FDR	2
17	MFFZZ	81337	M5-4-7649-2-72	FASTENER TAPE,LOOP MAKE FROM..... FASTENER TAPE,LOOP,P/N MIL-F-21840, TYII,CL3,1IN WIDE,WHITE,CUT20 IN ..... UOC:FDU	2
18	XBFZZ	81349	MIL-C-44423CL2	CLOTH,COATED ..... UOC :FDR	2
18	XBFZZ	81349	MIL-C-44423CL1	CLOTH,COATED ..... UOC:FDU	4
19	XBFZZ	81349	MIL-C-44423CL2	CLOTH,COATED ..... UOC:FDR	4
19	XBFZZ	81349	MIL-C-44423CL3	CLOTH,COATED ..... UOC: FDU	4
20	PAOZZ	81348	V-T-285TYIICL1SU BCLBCOLODSISZE	THREAD,POLYESTER ..... V UOC:FDR	
20	PAOZZ	81348	V-T-285TYIICL1SU BCLBCOLODSISZE	THREAD,POLYESTER ..... V UOC:FDU	
21	XDOZZ	96906	MS2023BPS4	SPUR GROMMET ASSY,4 ..... UDC:FDR	1
21	PAOZZ	96906	MS2023BPS4	SPUR GROMMET ASSY ..... UOC FDU	1
22	MFFZZ	81337	5-4-7606-1-1	WEBBING,TEXTILE MAKE FROM ..... WEBBING,TEXTILE,P/N MIL-W-4088, TYPE, VIII,CL2,1-22/32IN WIDE,OD7,CUT AS RE..... UOC:FDR	1
22	MFFZZ	81337	5-4-7606-1-1	WEBBING,TEXTILE MAKE FROM WEBBING,.....I	

(1) ITEM NO	(2) SMR CODE	(3) CAGEC	(4) PART NUMBER	(5) DESCRIPTION AND USABLE ON CODES (UOC)	(6) QTY
				TEXTILE,P/N MIL-W-4088,TYPE VIII ..... CL2,1-22/32IN WIDE,OD7,CUT AS REQ. ..... UOC:FDU	
23	MFFZZ	81337	M5-4-7649-1-29	WEBBING,TEXTILE MAKE FROM WEBBING, ... TEXTILE,P/N M5038-IV-2,11 IN WIDE,OD7, CUT 11 IN ..... UOC:FDR	10
23	MFFZZ	81337	M5-4-7649-2-29	WEBBING,TEXTILE MAKE FROM TAPE ..... EXTILE,P/N M5038-IV-2,1IN WIDE,OD7, CUT 11 IN ..... UOC:FDU	10
24	MFFZZ	81337	MS-4-7649-1-52	CORD MAKE FROM CORD,POLY,SOLBRAID, ... P/N MIL-C-43256,1/81N DIA, CAMOGREEN483,CUT 14IN ..... UOC:FDR	10
24	MFFZZ	81337	M5-4-7649-2-52	CORD,FIBROUS,POLYES MAKE FROM..... CORD,POLY,SOLBRAID,P/N MIL-C-43256, I/8 IN DIA,CAMOGREEN483,CUT 14IN ..... UOC:FDU	10
25	MFFZZ	81337	M5-4-7649-1-37	WEBBING,TEXTILE MAKE FROM WEBBING, ... V TEXTILE,P/N MIL-W-44049,TYI,CL4,2IN WIDE,OD7,CUT AS REQ..... UOC:FDR	
25	MFFZZ	81337	M5-4-7649-2-37	WEBBING,TEXTILE MAKE FROM WEBBING, ... V TEXTILE,P/N MIL-W-44049,TYI,CL4,2IN WIDE,OD7,CUT AS REQ..... UOC:FDU	
26	MFFZZ	81337	M5-4-7649-1-49	FASTENER TAPE,HOOK MAKE FROM ..... FASTENER TAPE,HOOK,P/N MIL-F-21840, TYII,CL3,1IN WIDE,GREEN3422,CUT 58-1/2I UOC:FDR	2
26	MFFZZ	81337	MS-4-7649-2-49	FASTENER TAPE,HOOK MAKF FROM ..... FASTENER TAPE,HOOK,P/N MIL-F-21840, TYII,CL3,1IN WIDE,GREEN3422,CUT 58-1/2I..... UOC:FDU	2
27	XDOZZ	96906	MS20230-BPS2	GROMMET,METALLIC ..... UOC:FDR	3
27	XDOZZ	96906	MS20230-BPS2	GROMMET,METALLIC ..... UOC:FDU	3
28	XBFZZ	81349	MIL-C-44423CL2	CLOTH,COATED ..... UOC:FDR	4
28	XBFZZ	81349	MIL-C-44423CL3	CLOTH,COATED ..... UOC:FDU	4
29	MFFZZ	81337	M5-4-7649-1-20	WEBBING,TEXTILE MAKE FROM WEBBING, ... TEXTILE,P/N MIL-W-44049,TY,CL4,3/ 8IN WIDE,OD7,CUT 16IN. UOC:FDR	4
29	MFFZZ	81337	M5-4-7649-2-20	WEBBING,TEXTILE MAKE FROM WEBBING, ... TEXTILE,P/N MIL-W-44049,TYI,CL4,3/ 8IN WIDE,OD7,CUT 16 IN	1

(1) ITEM NO	(2) SMR CODE	(3) CAGEC	(4) PART NUMBER	(5) DESCRIPTION AND USABLE ON CODES (UOC)	(6) QTY
				UOC:FDU	
30	MFFZZ	81337	MS-4-7649-1-47	FASTENER TAPE,HOOK MAKE FROM ..... FASTENER TAPE,HOOK,P/N MIL-F-21840, TYII,CL3,1IN WIDE,GREEN3422,CUT 45IN UOC:FDR	4
30	MFFZZ	81337	M5-4-7649-2-47	FASTENER TAPE,HOOK MAKE FROM ..... FASTENER TAPE,HOOK,P/N MIL-F-21840, TYII,CL3,1IN WIDE,GREEN3422,CUT 45IN UOC: FDU	4
31	MFFZZ	81337	M5-4-7649-1-48	FASTENER TAPE,LOOP MAKE FROM..... FASTENER TAPE,LOOP,P/N MIL-F-21840, TYII,CL3,1IN WIDE,GREEN3422,CUT 45IN UOC:FDU	4
31	MFFZZ	81337	M5-4-7649-2-48	FASTENER TAPE,LOOP MAKE FROM..... FASTENER TAPE,LOOP,P/N MIL-F-21840, TYII,CL3,1IN WIDE,GREEN3422,CUT 45IN UOC:FDU	4
32	MFFZZ	81337	M5-4-7649-1-32	WEBBING,TEXTILE MAKE FROM WEBBING,..... TEXTILE,P/N MIL-W-44049,TYI,CL4,2IN WIDE,007,CUT 3-1/4IN..... UOC: FDR	2
32	MFFZZ	81337	M5-4-7649-2-32	WEBBING,TEXTILE MAKE FROM WEBBING,..... TEXTILE,P/N MIL-W-44049,TYI,CL4,2IN WIDE,OD7,CUT 3-1/4IN..... UOC:FDU	2
33	MFFZZ	81337	M5-4-7649-1-46	TAPE,TEXTILE MAKE FROM TAPE,..... TEXTILE,COTTON,P/N MIL-T-43566,TYI, CL4,3/41N WIDE,OD7,CUT 18IN..... UOC:FDR	4
33	MFFZZ	81337	MS-4-7649-2-46	TAPE,TEXTILE MAKE FROM TAPE,..... TEXTILE,P/N MIL-T-54566,TYICL4,,3/ 4IN WIDE,OD7,CUT 18IN. UOC:FDU	4
34	XBFZZ	81349	MIL-C-44423CL2	CLOTH,COATED ..... UOC:FDR	1
34	XBFZZ	81349	MIL-C-44423CL1	CLOTH,COATED ..... UOC:FDU	1
35	MFFZZ	81337	M5-4-7649-1-61	FASTENER TAPE,LOOP MAKE FROM..... FASTENER TAPE,LOOP,P/N MIL-F-21840, TYII,CL3,2IN WIDE,GREEN3422,CUT 35IN UOC FDR	2
35	MFFZZ	81337	M5-4-7649-2-61	FASTENER TAPE,LOOP MAKE FROM..... FASTENER TAPE,LOOP,P/N MIL-F-21840, TYII,CL3,2IN WIDE,GREEN3422,CUT 35IN UOC: FDU	2
36	MFFZZ	81337	M5-4-7649-1-59	FASTENER TAPE,HOOK MAKE FROM ..... FASTENER TAPE,HOOK,P/N MIL-F-21840, TYII,CL3,1IN WIDE,GREEN3422,CUT 35IN UOC:FDR	2
36	MFFZZ	81337	M5-4-7649-2-59	FASTENER TAPE,HOOK MAKE FROM ..... FASTENER TAPE,HOOK,P/N MIL-F-21840, TYII,CL3,1IN WIDE,GREEN3422,CUT 35IN	2

(1) ITEM NO	(2) SMR CODE	(3) CAGEC	(4) PART NUMBER	(5) DESCRIPTION AND USABLE ON CODES (UOC)	(6) QTY
				UOC:FDU	
37	MFFZZ	81337	M5-4-7649-1-58	FASTENER TAPE,LOOP MAKE FROM..... FASTENER TAPE,LOOP,P/N MIL-F-21840, TYII,CL3,2IN WIDE,GREEN3422,CUT 23IN UOC:FDR	4
37	MFFZZ	81337	M5-4-7649-2-58	FASTENER TAPE,LOOP MAKE FROM..... FASTENER TAPE,LOOP,P/N MIL-F-21840, TYII,CL3,1IN WIDE,GREEN3422,CUT 23TN UOC FDU	4
38	MFFZZ	81337	M5-4-7649-1-57	FASTENER,TAPE,HOOK MAKE FROM ..... FASTENER TAPE,HOOK,P/N MIL-F-21840, TYII,CL3,1IN WIDE,GREEN3622,CUT 23IN UOC:FDR	4
38	MFFZZ	81337	M5-4-7649-2-57	FASTENER TAPE,HOOK MAKE FROM ..... FASTENER TAPE,HOOK,P/N MIL-F-21840, TYII,CL3,1IN WIDE,GREEN3422,CUT23IN. UOC: FDU	4
39	XBFZZ	81349	MIL-C-44423CL2	CLO)TH,COATED ..... UOC:FDR	1
39	XBFZZ	81349	MIL--C-44423CL3	CLOTH,COATED ..... UOC:F-D)U	1
40	XBFZZ	81349	MIL-C-44423CL2	CLOTH,COATED ..... UOC:FDR	2
40	XBFZZ	81349	MIL-C-44423CL3	CLOTH,COATED ..... UOC:FDU	2
41	XBFZZ	81349	MIL-C-44423CL2	CLOTH,COATED ..... UOC:FDR	1
41	XBFZZ	81349	MIL-C-44423CL1	CLOTH,COATED ..... UOC:FDU	1
42	XBFZZ	81349	MIL-C-44423CL2	CLOTH,COATED ..... UOC :FDR	8
42	XBFZZ	81349	MIL--C-44423CL1	CLOTH,COATED ..... UOC:FDU	8

END OF FIGURE

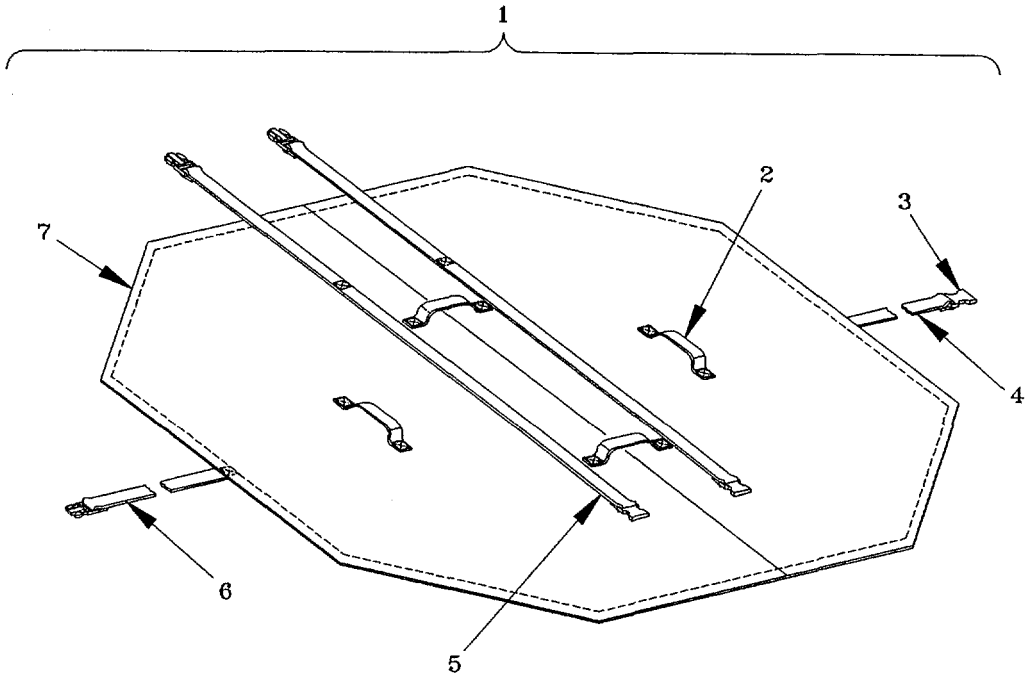

Figure 4. COVER ASSEMBLY

(1) ITEM NO	(2) SMR CODE	(3) CAGEC	(4) PART NUMBER	(5) DESCRIPTION AND USABLE ON CODES (UOC)	(6) QTY
				GROUP 04 COVER ASSEMBLY FIGURE 04 COVER ASSEMBLY	
1	XDOFF	81337	5-4-7647-1	COVER ASSEMBLY	1
2	MFFZZ	81337	5-4-7647-2	WEBBING,TEXTILE MAKE FROM WEBBING,..... TEXTILE,P/N MIL-W-4088,TY VIII,CL2, 1-23/32IN WIDE,OD7,CUT 12-1/2IN	4
3	XDOZZ	70474	91851	SIDE RELEASE,NYLON	3
4	MFF7Z	81337	5-4-7647-4	WEBBING,TEXTILE MAKE FROM WEBBING,..... TEXTILE,P/N MIL-W-4088,TY VIII,CL2, 1-23/32IN WIDE,OD7,CUT 7-7/81N.	1
5	MFFZZ	81337	5-4-7647-3	WEBBING,TEXTILE MAKE FROM WEBBING,..... TEXTILE,P/N MIL-W-40)88,TY VIII,CL2, 1-23/32IN WIDE,OD7,CUT 64IN.....	2
6	MFFZZ	81337	5-4-7647-5	WEBBING,TEXTILE MAKE FROM WEBBING,..... TEXTILE,P/N MIL-W-4088,TYPE VIII, CL2,1-23/32WIDE,OD7,CUT 20IN	1
7	XBFZZ	81349	MIL-C-20696	CLOTH,COATED,POLY..... V	

END OF FIGURE

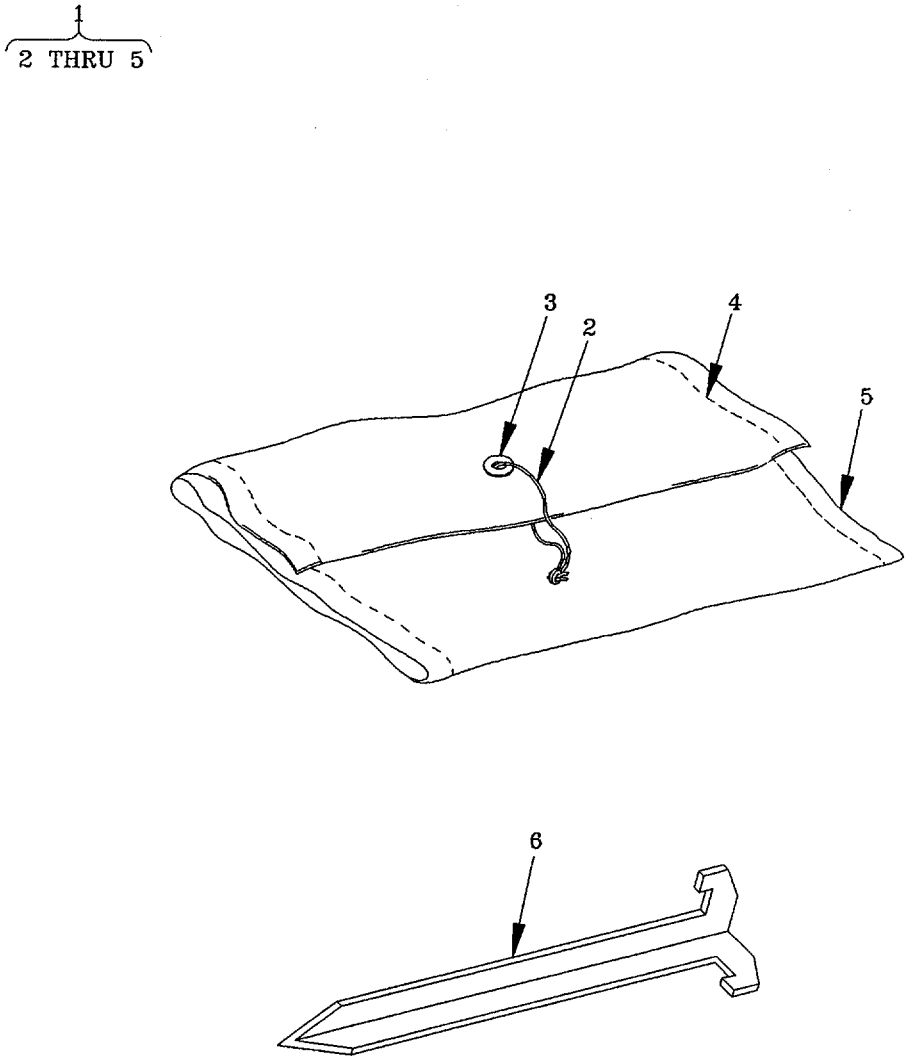

Figure 5. FSCT PEGS AND BAG

(1) ITEM NO	(2) SMR CODE	(3) CAGEC	(4) PART NUMBER	(5) DESCRIPTION AND USABLE ON CODES (UOC)	(6) QTY
				GROUP 05 FSCT PEGS AND BAG FIGURE 05 FSCT PEGS AND BAG	
1	XDOZZ	81337	5-4-7679-1	PARTS,BAG,COMMON,FS.....	1
2	MFFZZ	81349	MIL-C-43256	CORD,POLYESTER MAKE FROM CORD,..... POLY,SOLBRAID,P/N MIL-C-4325,1/8IN DIA,CAMOGREEN483,CUT 14IN.....	1
3	XDOZZ	96906	MS20230-BPS4	GROMMET,METALLIC	1
4	PAOZZ	81348	V-T-285TYIICLISU BCLBCOLCG483SZE	THREAD, POLYESTER V	
5	XBFZZ	81349	MIL-C-20696CL2	CLOTH,COATED	1
6	PAOZZ	81349	MIL-P-501,TYI,AL	PIN,TENT.....	10

END OF FIGURE

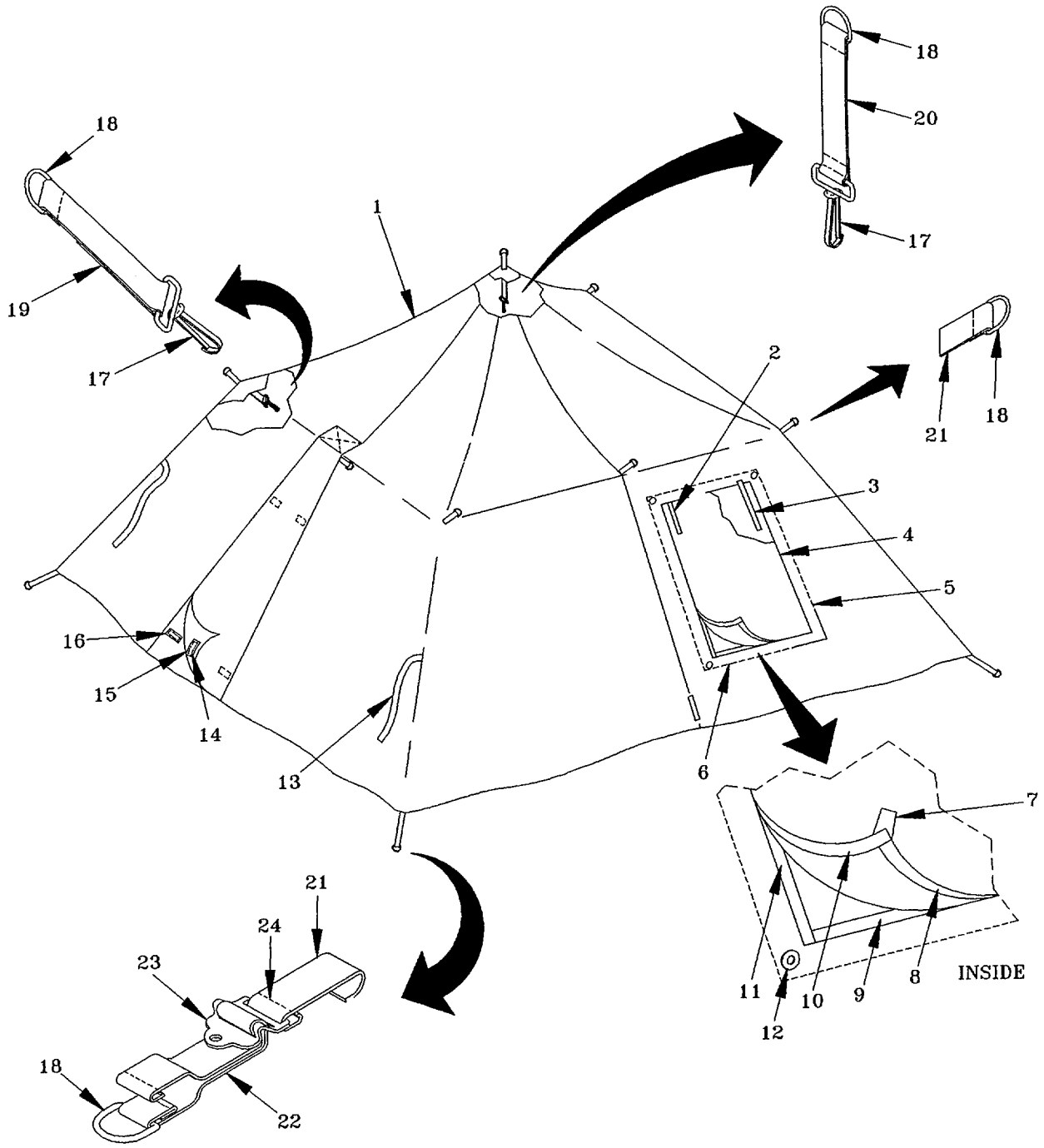

Figure 6. LINER ASSEMBLY (Sheet 1 of 2)

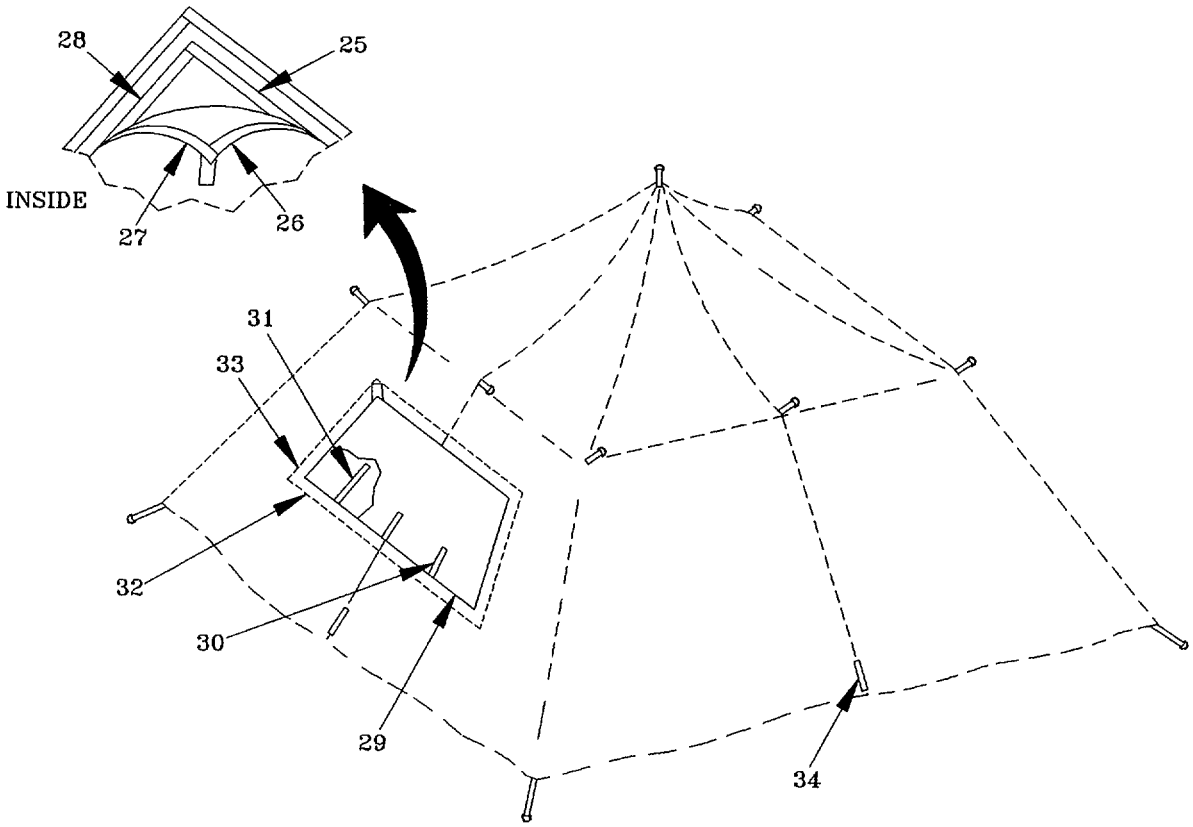

Figure 6. LINER ASSEMBLY (Sheet 2 of 2)

(1) ITEM NO	(2) SMR CODE	(3) CAGEC	(4) PART NUMBER	(5) DESCRIPTION AND USABLE ON CODES (UOC)	(6) QTY
				GROUP 06 LINER ASSEMBLY FIGURE 06 LINER ASSEMBLY	
1	XBOFF	81337	M5-4-7661-1	LINER ASY,FSCT TYII ..... UOC FDU	1
2	MFFZZ	81337	M5-4-7661-13	FASTENER TAPE,LOOP MAKE FROM ..... FASTENER TAPE,LOOP,P/N MIL-F-21840, TYII,CL3,1IN WIDE,OGI06,CUT 6 IN.... ..... UOC:FDU	2
3	MFFZZ	81337	M5-4-7661-14	FASTENER TAPE,HOOK MAKE FROM ..... FASTENER TAPE,HOOK,P/N MIL-F-21840, TYII,CL3,1IN WIDE,0G106,CUT 6 IN. ..... UCC:FDU	2
4	XBFZZ	81349	MIL-C-10859	CLOTH,OXFORD,COTTON ..... UOC:FDU	1
5	XBFZZ	81349	MIL-C-10859	CLOTH,OXFORD,COTTON ..... UOC:FDU	2
6	XBFZZ	81349	MIL-C-10859	CLOTH,OXFORD,COTTON ..... UOC:FDU	2
7	MFFZZ	81337	M5-4-7661-42	TAPE,TEXTILE MAKE FROM TAPE, ... TEXTILE,COTTON,P/N MIL-T-43566,TYI, CLIB,3/4IN WIDE,NATURAL,CUT 4IN UOC:FDU	4
8	MFFZZ	81337	M5-4-7661-15	FASTENER TAPE,HOOK MAKE FROM ..... FASTENER TAPE,HOOK,P/N MIL-F-21340, TYII,CL3,1IN WIDE,OG106,CUT 20IN.... UOC:FDU	1
9	MFFZZ	81337	M5-4-7661-16	FASTENER TAPE,LOOP MAKE FROM ..... FASTENER TAPE,LOOP,P/N MIL-F-21840, TYII,CL3,1IN WIDE,OG106,CUT 20IN UOC:FDU	1
10	MFFZZ	81337	M5-4-7661-18	FASTENER TAPE,HOOK MAKE FROM ..... FASTENER TAPE,HOOK,P/N MIL-F-21840, TYII,CL3,1IN WIDE,0O106,CUT 301N.. UOC:FDU	2
11	MFFZZ	81337	M5-4-7661-17	FASTENER TAPE,LOOP MAKE FROM ..... FASTENER TAPE,LC)OP,P/N MIL-F-21840, TYII,CL3,1IN WIDE,OG106,CUT 30IN.... UUC:FDU	2
12	XDOZZ	96906	MS20230-BPS2	GROMMET,METALLIC ..... UOC:FDU	4
13	MFFZZ	81337	M5-4-7661-49	TAPE,TEXTILE MAKE FROM TAPE, ... TEXTILE,COTTON,P/N MIL-T-43566,TYI, CLIB,3/4IN WIDE,NATURAL,CUT 30IN.... UOC:FDU	2
14	PAOZZ	81348	V-T-285TYIICLISU BCLBCOLODSISZE	THREAD,POLYESTER ..... UOC:FDU	V
15	MFFZZ	81337	M5-4-7667-2	FASTENER TAPE,HOOK MAKE FROM ..... FASTENER TAPE,HOOK,P/N MIL-F-21840, TYII,CL3,11N WIDE,0G106,CUT 2 IN.... ..... UOC: FDU	4
16	MFFZZ	81337	M5-4-7661-40	FASTENER TAPE,LOOP MAKE FROM	4

(1) ITEM NO	(2) SMR CODE	(3) CAGEC	(4) PART NUMBER	(5) DESCRIPTION AND USABLE ON CODES (UOC)	(6) QTY
				FASTENER TAPE,LOOP,P/N MIL-F-21840, TYII,CL3,1IN WIDE,OG106,CUT 2IN. UOC:FDU	
17	XDOZZ	81349	MILS43770/1SW2E2	SNAPHOOK..... UOC:FDU	5
18	XDOZZ	81349	MIL-R-3390	RING,D,CL2,CONFIG X ..... UOC:FDU	13
19	MFFZZ	81337	M5-4-7661-29	TAPE,TEXTILE MAKE FROM TAPE ..... TEXTILE,COTTON,P/N MIL-T-43566,TYI, CL1B,3/4IN WIDE,NATURAL,CUT 4-1/2I UOC:FDU	1
20	MFFZZ	81337	M5-4-7661-31	TAPE MAKE FROM TAPE.TEXTILE ..... COTTON,P/N MIL-T-43566,TYI,CL1B,3/ 41N WIDE,NATURAL,CUTIO IN ..... UOC: FDU	1
21	MFFZZ	81337	M5-4-7661-30	TAPE MAKE FROM TAPE,TEXTILE ..... COTTON,P/N MIL-T-43566,TYI,CL1B,3/ 4IN WIDE,NATURAL,CUT3 IN ..... UOC : FDU	7
22	MFFZZ	81337	MS-4-7661-32	TAPE MAKE FROM TAPE,TEXTILE ..... COTTON,P/N MIL-T-43566,TYI,CL1B,3/ 4IN WIDE,NATURAL,CUT 7IN. ..... UOC:FDU	4
23	PAOZZ	81349	MIL-B-543TYVCL3S IZE1IN	BUCKLE,QUICK RELEAS..... UOC:FDU	4
24	PAOZZ	81348	V-T-285TYIICLISU BCLBCOLODSISZE	THREAD,POLYESTER ..... V UOC:FDU	
25	MFFZZ	81337	M5-4-7661-20	FASTENER,TAPE,LOOP MAKE FROM..... FASTENER TAPE,LOOP,P/N MIL-F-21840, TYII,CL3,1IN WIDE,OG106,CUT 35IN ..... UOC:FDU	1
26	MFFZZ	81337	M5-4-7661-21	FASTENER,TAPE,HOOK MAKE FROM ..... FASTENER TAPE,HOOK,P/N MIL-F-21840, TYII,CL3,1IN WIDE,OG106,CUT 35IN ..... UOC:FDU	1
27	MFFZZ	81337	M5-4-7661-39	FASTENER TAPE,HOOK MAKE FROM ..... FASTENER TAPE,HOOK,P/N MIL-F-21840, TYII,CL3,11N WIDE,OG106,CUT 22-1/2IN UOC:FDU	2
28	MFFZZ	81337	M5-4-7661-38	FASTENER TAPE,LOOP MAKE FROM..... FASTENER TAPE,LOOP,P/N MIL-F-21840, TYII,CL3,11N WIDE,OG106,CUT 22-1/2IN UOC:FDU	2
29	XBFZZ	81349	MIL-C-10859	CLOTH,OXFORD, COTTON ..... UOC:FDU	1
30	MFFZZ	81337	MS-4-7661-25	FASTENER TAPE,HOOK MAKE FROM ..... FASTENER TAPE,HUOK,P/N MIL-F-21840, TYII,CL3,1IN WIDE,UG106,CUT 6LN. UOC:FDU	3
31	MFFZZ	81337	M5-4-7661-24	FASTENER TAPE,LOOP MAKE FROM..... FASTENER TAPE,LOOP,P/N MIL-F-21840, TYII,CL3,1IN WIDE,DGID6,CUT 6IN	3

(1) ITEM NO	(2) SMR CODE	(3) CAGEC	(4) PART NUMBER	(5) DESCRIPTION AND USABLE ON CODES (UOC)	(6) QTY
32	XBFZZ	81349	MIL-C-10859	CLOTH, OXFORD, COTTON ..... UOC :FDU	2
33	XBFZZ	81349	MIL-C-10859	CLOTH, OXFORD, COTTON ..... UOC: FDU	2
34	MFFZZ	81337	M5-4-7661-26	FASTENER TAPE, HOOK MAKE FROM ..... FASTENER TAPE, HOOK, P/N MIL-F-21840, TYII, CL3, 1 IN WIDE, 0G106, CUT 4 IN. UOC: FDU	3

END OF FIGURE

(1) ITEM NO	(2) SMR CODE	(3) CAGEC	(4) PART NUMBER	(5) DESCRIPTION AND USABLE ON CODES (UOC)	(6) QTY
				GROUP 07 BULK ITEMS FIGURE BULK	
1	PAOZZ	81349	MIL-C-43256SOLBR AID1/8INCAMGR483	CORD, FIBROUS, POLEST CORD, POLYESTER, SOLID BRAID, P/N MIL-C-43256IN DIA, CAMO GREEN 3422	V
2	PAOZZ	81348	M5038-III-2, 1-1/	EDGING, TAPE, TEXTILE EDGING TAPE: ..... 2 IN WIDE, COL OD7 TEXTILE, NYLON, M5038-III-2, 1-1/1/2IN WIDE, DD7	V
3	PADZZ	81349	MIL-F-21840, TYII CL3, 1INDESTAN459	FASTENER TAPE, HOOK FASTENER TAPE, ... HOOK, MIL-F-21840, TYII, CL3, 1 IN WIDE, DESERT TAN 159	V
4	PAOZZ	81349	MIL-F-21840, TYII CL3, 1IN, WHITE	FASTENER TAPE, LOOP FASTENER TAPE, ... LOOP, MIL-F-21840, TYII, CL3, 1 IN WIDE, WHITE	V
5	PAOZZ	81349	MIL-F-21840, TYII CL3, 2IN, DESTN459	FASTENER TAPE, LOOP FASTENER TAPE, ... LOOP, MIL-F-21840, TYII, CL3, 2 IN WIDE, DESERT TAN 459	V
6	PAOZZ	81349	MIL-F-21840, TYII CL3, 2IN, GRN3422	FASTENER TAPE, LOOP FASTENER TAPE, ... LOOP, MIL-F-21840, TYII, CL3, 2 IN WIDE, GREEN 3422	V
7	PAOZZ	81349	MIL-F-21840, TYII CL3, 1IN, DESTN459	FASTENER TAPE, LOOP FASTENER TAPE, ... LOOP, MIL-F-21840, TYII, CL3, 2 IN WIDE, WHITE	V
8	PAOZZ	81349	MIL-F-21840, TYII CL3, 1INlOG106	FASTENER TAPE, HOOK FASTENER TAPE, ... HOOK, MIL-F-21840, TYII, CL3, 1 IN WIDE, GREEN OG106	V
9	PAOZZ	81349	MIL-F-21840, TYII CL3, 1IN, GRN3422	FASTENER TAPE, HOOK FASTENER TAPE, ... HOOK, MIL-F-21840, TYII, CL3, l IN WIDE, GREEN 3422	V
10	PAOZZ	81349	MIL-F-21840, TYII CL3, 1INPWHITE	FASTENER TAPE, HOOK FASTENER TAPE, ... HOOK, MIL-F-21840, TYII, CL3, 1 IN WIDE, WHITE	V
11	PAOZZ	81349	MIL-F-21840, TYII CL3, 2IN, DESTN459	FASTENER TAPE, HOOK FASTENER TAPE, ... HOOK, MIL-F-2184(0, TYII, CL3, 2 IN WIDE, DESERT TAN 459	V
12	PAOZZ	81349	MIL-F-21840, TYII CL3, 2IN, GRN3422	FASTENER TAPE, HOOK FASTENER TAPE, ... HOOK, MIL-F-21840, TYII, CL3, 2 IN WIDE, GREEN 3422	V
13	PAOZZ	81349	MIL-F-21840, TYII CL3, 2IN, WHITE	FASTENER TAPE, HOOK FASTENER TAPE, ... HOOK, MIL-F-21840, TYIJ, CL3, 2 IN WIDE, WHITE	V
14	PAOZZ	81349	MIL-F-21840, TYII CL3, 1IN, DESTN459	FASTENER TAPE, LOOP FASTENER TAPE, ... HOOK, MIL-F-21840, TYIV, CL3, 1 WIDE, WHITE	V
15	PAOZZ	81349	MIL-F-21840, TYII CL3, 1IN, OG106	FASTENER TAPE, LOOP FASTENER TAPE, ... LOOP, MIL-F-21840, TYII, CL3, 1 IN WIDE, GREEN OG106	V
16	PAOZZ	81349	MIL-F-21840, TYII CL3, 1IN, GRN3422	FASTENER TAPE, LOOP FASTENER TAPE, ... LOOP, MIL-F-21840, TYII, CL3, 1 IN WIDE, GREEN 3422	V
17	PAOZZ	81349	MIL-R-1670, TYI, C	ROPE, MANILA ROPE, MANILA, MIL-R-1670, ...	V

(1) ITEM NO	(2) SMR CODE	(3) CAGEC	(4) PART NUMBER	(5) DESCRIPTION AND USABLE ON CODES (UOC)	(6) QTY
			L2, 1/4IN DIA	TYI, CL2, 1/4 IN DIA	
18	PAOZZ	81349	MIL-T-43566, TYI, CLIB, NATURAL	TAPE, TEXTILE, COTTON TAPE, TEXT; IL- COTTON, MIL-T-43566, TYI, CL1B, 3/4 IN WIDE, NATURAL	V
19	PADZZ	81349	MIL-T-43566, TYI, CL4, 1/2IN, 0D7	TAPE, TEXTILE, COTTON TAPE, TEXTILE, COTTON, MIL-T-43566, TYI, CL4, 1 IN WIDE, D7 E	V
20	PAOZZ	81349	MIL-T-43566, TYI, CL4, 3/41N, OD7	TAPE, TEXTILE, COTTON TAPE, TEXTILE, COTTON, MIL-T-43566, TYI, CL4, 3/4 IN WIDE , OD7	V
21	PAOZZ	81349	MIL-T-43566, TYI, CL4, IIN, OD7	TAPE, TEXTILE, COTTON TAPE, TEXTILE, COTTON, MIL-T-43566, TYI, CL4, 1 IN WIDE, OD7	V
22	PADZZ	81348	M5038-TV-2, 1 IN, O D7	TAPE, TEXTILE TAPE, TEXTILE, NYLON, M5038-IV-2, 1 IN WIDE, OD 7	V
23	PAOZZ	81348	V-T-285TYICL1SUB CLBCOLODSISZE	THREAD, POLYESTER THREAD, POLYESTER, V-T-285, TYI, CLI, SUBCLB, OD-S1, SIZE E .	V
24	PAOZZ	81348	V-T-285TYIICLISU BCLBCOLODSLSZE	THREAD, POLYESTER THREAD, POLYESTER, V-T-285, TYII, CLI, SUBCLB, ODS1, SIZE E	V
25	PAOZZ	81348	V--T-285TYIICLISU BCLBCOLODSISZFF	THREAD, POLYESTER THREAD, POLYESTER, V-T-285, TYII, CLI, SUBCLB, ODS1, SIZE FF	V
26	PAOZZ	81349	MIL-W-4088, TYVII , CL2, 21N, OD7	WEBBING, TEXTILE WEBBING, TEXTILE, MIL-W-4088, TYVII , CL2, 2 IN WIDE, DD7	V
27	PAOZZ	81349	MIL-W-4088, TYVII I, CL2, 1 23/32, OD	WEBBING, TEXTILE WEBBING, TEXTILE, MIL-W-4088, TYVIII, CL2, 1-23/32 IN WIDE, , D7	V
28	PAOZZ	81349	MIL-W-4088, TYXVI I, CL2, 1IN, OD7	WEBBING, TEXTILE WEBBING, TEXTILE, MIL-W-4088, TYXVII, CL2, 1 IN WIDE	V
29	PAOZZ	81349	MIL-W-44049, TYI, CL43/8IN, OD7	WEBBING, TEXTILE WEBBING, TEXTILE, MIL-W--44049, TYI, CL4, 3/8 IN WIDE, OD7	V
30	PAOZZ	81349	MIL-W-44049, TYI, CL4, 2IN, OD7	WEBBING, TEXTILE WEBBING, TEXTILE, MIL-W-44049, TYI, CL4, 2 IN WIDE, OD7	V

END OF FIGURE

CROSS-REFERENCE INDEXES

NATIONAL STOCK NUMBER INDEX

STOCK NUMBER	FIG.	ITEM	STOCK NUMBER	FIG.	ITEM

NO DETAIL RECORDS QUALIFY FOR INDEX

CROSS-REFERENCE INDEXES

PART NUMBER INDEX

CAGEC	PART NUMBER	STOCK NUMBER	FIG.	ITEM
81349	MIL-B-543TYVCL3S IZE1IN		1	28
			2	20
			6	23
81349	MIL-C-10859		6	4
			6	5
			6	6
			6	29
			6	32
			6	33
81349	MIL-C-20696		1	26
			4	7
81349	MIL-C-20696CL2		5	5
81349	MIL-C-43256		5	2
81349	MIL-C-43256SOLBR AID1/8INCAMCR483		BULK	1
81349	MIL-C-44423CL1		2	2
			2	35
			2	36
			2	40
			2	42
			2	47
			2	50
			2	51
			2	54
			2	54
			2	59
			2	6G
			2	63
			2	68
			2	69
			2	77
			2	79
			2	87
			2	89
			3	1
			3	18
			3	34
			3	41
			3	42
81349	MIL-C-44423CL2		3	7
			3	15
			3	18
			3	19
			3	28
			3	34
			3	39
			3	40
			3	41
			3	42
81349	MIL-C-44423CL3		3	7

CROSS-REFERENCE INDEXES

PART NUMBER INDEX

CAGEC	PART NUMBER	STOCK NUMBER	FIG.	ITEM
81349	MIL-C-44423CL3		3	19
			3	28
			3	39
			3	40
81349	MIL-F-21840, TYII CL3, 1 IN, DESTN459		BULK	7
			BULK	14
81349	MIL-F-21840, TYII CL3, 1 IN, GRN3422		BULK	9
			BULK	16
81349	MIL-F-21840, TYII CL3, 1 IN, OG106		BULK	8
			BULK	15
81349	MIL-F-21840, TYII CL3, 1 IN, WHITE		BULK	4
			BULK	10
81349	MIL-F-21840, TYII CL3, 1INDESTAN459		BULK	3
81349	MIL-F-21840, TYII CL3, 2 IN, DESTN459		BULK	5
			BULK	11
81349	MIL-F-21840, TYII CL3, 2 IN, GRN3422		BULK	6
			BULK	12
81349	MIL-F-21840, TYII CL3, 2 IN, WHITE		BULK	13
81349	MIL-P-501, TYI, AL		5	6
81349	MIL-R-1670, TYI, C L2, ¼ IN DIA		BULK	17
81349	MIL-R-3390		6	18
81349	MIL-T-43566, TYI, CLIB, NATURAL		BULK	18
81349	MIL-T-43566, TYI, CL4, ½ IN, OD7		BULK	19
81349	MIL-T-43566, TYI, CL4, 1 IN, OD7		BULK	21
81349	MIL-T-43566, TYI, CL4, ¾ IN, OD7		BULK	20
81349	MIL-W-4088, TYVII , CL2, 2 IN, OD7		BULK	26
81349	MIL-W-4088, TYVII I, CL2, 123/32, OD		BULK	27
81349	MIL-W-4088, TYXVI I, CL2, 1 IN, OD7		BULK	2B
81349	MIL--W-44049, TYI, CL4 3/8 IN, OD7		BULK	29
81349	MIL-W-44049, TYI, CL4, 2 IN, D7		BULK	30
81349	MIL-W-83420TYICO MPB		1	13
			1	19

CROSS-REFERENCE INDEXES

PART NUMBER INDEX

CAGEC	PART NUMBER	STOCK NUMBER	FIG.	ITEM
81349	MILS43770/ICWBC3		2	16
			2	22
			2	26
81349	MILS43770/ISW2E2		6	17
96906	MS2023BPS4		3	21
			3	21
96906	MS20230-BPS2		3	27
			3	27
			6	12
96906	MS20230-BPS4		5	3
96906	MS51956-59		1	6
81337	MS-4-7613-1		2	1
81337	M5-4-7613-12		2	10
81337	M5-4-7613-15		2	7
81337	M5-4-7613-16		2	6
81337	M5-4-7613-18		2	9
81337	M5-4-7613-21		2	5
81337	M5-4-7613-24		2	8
81337	MS-4-7614-10		2	97
81337	M5-4-7614-15		2	99
81337	M5-4-7614-17		2	100
81337	M5-4-7614-9		2	98
81337	MS-4-7623-10		2	86
81337	M5-4-7623-l1		2	82
81337	M5-4-7623-12		2	83
81337	M5-4-7623-13		2	91
81337	MS-4-7623-14		2	90
81337	M15-4-7623-15		2	84
81337	M5-4-7623-16		2	92
81337	M5-4--7623-8		2	88
81337	M5-4-7623-9		2	85
81337	M5-4-7629-10		2	70
81337	M5-4-7629-11		2	65
81337	MS-4-7629-12		2	66
81337	M5-4-7629-13		2	71
81337	M5-4-7629-14		2	72
81337	M5-4-7629-15		2	67
81337	MS-4-7629-16		2	73
81337	M5-4-7629-18		2	74
81337	M5-4-7629-19		2	75
81337	M5-4-7629-9		2	64
81337	M5-4-7634-10		2	46
81337	M5-4-7634-12		2	52
81337	M5-4-7634-13		2	44
81337	M5-4-7634-7		2	49
81337	M5-4-7634-8		2	48
81337	M5-4-7634-9		2	45
81337	MS-4-7639-10		2	30
81337	M5-4-7639-14		2	32
81337	M5-4-7639-15		2	34
81337	M5-4-7639-7		2	33

CROSS-REFERENCE INDEXES

PART NUMBER INDEX

CAGEC	PART NUMBER	STOCK NUMBER	FIG.	ITEM
81337	M5-4-7639-8		2	31
81337	M5-4-7639-9		2	37
81337	M5-4-7649-1		3	1
81337	M5-4-7649-1-20		3	29
81337	M5-4-7649-1-29		3	23
81337	M5-4-7649-1-32		3	32
81337	M5-4-7649-1-37		3	25
81337	M5-4-7649-1-38		3	2
81337	M5-4-7649-1-40		3	5
81337	M5-4-7649-1-41		3	6
81337	M5-4-7649-1-46		3	33
81337	M5-4-7649-1-47		3	30
81337	M5-4-7649-1-48		3	31
81337	M5-4-7649-1-49		3	26
81337	M5-4-7649-1-50		3	13
81337	M5-4-7649-1-51		3	14
81337	M5-4-7649-1-52		3	24
81337	MS-4-7649-1-54		3	12
81337	M5-4-7649-1-57		3	38
81337	M5-4-7649-1-58		3	37
81337	M5-4-7649-1-59		3	36
81337	M5-4-7649-1-61		3	35
81337	M5-4-7649-1-65		3	8
81337	M5-4-7649-1-66		3	9
81337	M5-4-7649-1-67		3	4
81337	M5-4-7649-1-68		3	3
81337	M5-4-7649-1-69		3	11
81337	M5-4-7649-1-70		3	10
81337	M5-4-7649-1-71		3	16
81337	M5-4-7649-1-72		3	17
81337	M5-4-7649-2		3	1
81337	MS-4-7649-2-20		3	29
81337	MS-4-7649-2-29		3	23
81337	M5-4-7649-2-32		3	32
81337	M5-4-7649-2-37		3	25
81337	M5-4-7649-2-38		3	2
81337	M5-4-7649-2-40		3	5
81337	M5-4-7649-2-41		3	6
81337	M5-4-7649-2-46		3	33
81337	M5-4-76)49-2-47		3	30
81337	M5-4-7649-2-48		3	31
81337	M5-4-7649-2-49		3	26
81337	M5-4-7649-2-50		3	13
81337	M5-4-7649-2-5i		3	14
81337	M5-4-7649-2-52		3	24
81337	M5-4-7649-2-54		3	12
81337	M5-4-7649-2-57		3	38
81337	M5-4-7649-2-58		3	37
81337	M5-4-7649-2-59		3	36
81337	M5-4-7649-2-61		3	35
81337	M5-4-7649-2-65		3	8

CROSS-REFERENCE INDEXES

PART NUMBER INDEX

CAGEC	PART NUMBER	STOCK NUMBER	FIG.	ITEM
81337	M5-4-7649-2-66		3	9
81337	M5-4-7649-2-67		3	4
81337	M5-4-7649-2-68		3	3
81337	M5-4-7649-2-69		3	11
81337	M5-4-7649-2-70		3	10
81337	M5-4-76)49-2-71		3	16
81337	M5-4-7649-2-72		3	17
81337	M5-4-7661-1		6	1
81337	MS-4-7661-13		6	2
81337	MS-4-7661-14		6	3
81337	M5-4-7661-15		6	8
81337	M5-4-7661-16		6	9
81337	M5-4-7661-17		6	11
81337	M5-4-7661-18		6	10
81337	MS-4-7661-20		6	25
81337	M5-4-7661-21		6	26
81337	MS-4-7661-24		6	31
81337	M5-4-7661-25		6	30
81337	M5-4-7661-26		6	34
81337	MS-4-7661-29		6	19
81337	M5-4-7661-30		6	21
81337	M5-4-7661-31		6	20
81337	M5-4-7661-32		6	22
81337	M5-4-7661-38		6	28
81337	M5-4--7b61-39		6	27
81337	M5-4-7661-40		6	16
81337	M5-4-7661-42		6	7
81337	M5-4-7661-49		6	13
81337	M5-4-7667-2		6	15
81348	M5038-III-2, 1-1/ 2 IN WIDE, COL OD7		BULK	2
81348	M5038-IV-2, 1 IN, O D7		BULK	22
81348	V-T-285TYICL1SUB CLBCOLODS1SZE		1	25
			2	13
			2	29
			2	38
			2	53
			2	55
			2	58
			2	62
			2	76
			2	78
			2	81
			BULK	23
81348	V-T-285TYIICL1SU BCLBCOLCG483SZE		5	4
81348	V-T-285TYIICLISU BCLBCOLODS1SZE		2	4
			2	17

CROSS-REFERENCE INDEXES

PART NUMBER INDEX

CAGEC	PART NUMBER	STOCK NUMBER	FIG.	ITEM
81348	V-T-285TYIICL1SU BCLBCOLODS1SZE		2	23
			2	27
			2	39
			2	41
			2	43
			2	57
			2	60
			2	93
			2	101
			3	20
			3	20
			6	14
			6	24
			BULK	24
81348	V-T-285TYIICL1SU BCLBCOLODS1SZFF		2	3
			2	80
			2	96
			BULK	25
81337	5-4-7582-1		1	1
81337	5-4-7585-1		1	2
81337	5-4-7586-1		1	8
81337	5-4-7587-1		1	5
81337	5-4-7589-1		1	3
81337	5-4-7590-1		1	10
81337	5-4-7591-1		1	11
81337	5-4-7591-2		1	17
81337	5-4-7592-1		1	18
81337	5-4-7592-2		1	12
81337	5-4-7593-1		1	7
81337	5-4-7597-1		1	15
			1	21
81337	5-4-7598-1		1	14
			1	20
81337	5-4-7599-1		1	4
81337	5-4-7601-1		1	23
81337	5-4-7602-1		1	5
81337	5-4-7603-1		1	16
			1	22
81337	5-4-7604-1		1	24
81337	5-4-7604-1-2		1	27
81337	5-4-7604-1-3		1	30
81337	5-4-7604-1-4		1	29
81337	5-4-7604-1-5		1	31
81337	5-4-7606-1-1		3	22
			3	22
81337	5-4-7616-1		2	25
81337	5-4-7616-1-2		2	28
81337	5-4-7616-14		2	11
81337	5-4-7616-2		2	21

CROSS-REFERENCE INDEXES

PART NUMBER INDEX

CAGEC	PART NUMBER	STOCK NUMBER	FIG.	ITEM
81337	5-4-7616-2-2		2	24
81337	5-4-7617-1		2	94
81337	5-4-7617-2		2	95
81337	5-4-7618-1-1		2	14
81337	5-4-7644-1		2	15
81337	5-4--7644-3		2	18
81337	5-4-7644-4		2	19
81337	5-4-7647-1		4	1
81337	5-4-7647-2		4	2
81337	5-4-7647-3		4	5
81337	5-4-7647-4		4	4
81337	5-4-7647-5		4	6
81337	5-4-7679-1		5	1
81337	5-4-7684-1		2	12
70474	91851		4	3

CROSS REFERENCE INDEXES

FIGURE AND ITEM NUMBER INDEX

FIG.	ITEM	STOCK NUMBER	CAGEC	PART NUMBER
BULK	1		81349	MIL-C-43256SOLBR AIDI/8INCAMGR483
BULK	2		81348	M5038-III-2, 1-1/ 2 IN WIDE, COLOD7
BULK	3		81349	MIL-F-21840, TYII CL3, 1 IN DESTAN459
BULK	4		81349	MIL-F-21840, TYII CL3, 1 IN, WHITE
BULK	5		81349	MIL-F-21840, TYII CL3, 2 IN, DESTN459
BULK	6		81349	MIL-F-21840, TYII CL3, 2 IN, GRN3422
BULK	7		81349	MIL-F-21840, TYII CL3, 1 IN, DESTN459
BULK	8		81349	MIL-F-21840, TYII CL3, 1 IN, OG106
BULK	9		81349	MIL-F-21840, TYII CL3, 1 IN, GRN3422
BULK	10		81349	MIL-F-21840, TYII CL3, 1 IN, WHITE
BULK	11		81349	MIL-F-2184U.TYII CL3, 2 IN, DESTN459
BULK	12		81349	MIL-F-21340, TYII CL3, 2 IN, GRN3422
BULK	13		81349	MIL-F-21340, TYII CL3, 2 IN, WHITE
BULK	14		81349	MIL-F-21840, TYII CL3, 1 IN, DESTN459
BULK	15		81349	MIL-F-21840, TYII CL3, 1 IN, OGOI6
BULK	16		81349	MIL-F-21840, TYII CL3, 1 IN, GRN3422
BULK	17		81349	MIL-R-1670, TYI, C L2, ¼ IN DIA
BULK	18		81349	MIL-T-43566, TYI. CL1B, NATURAL
BULK	19		81349	MIL-T-43566, TYI. CL4, ½ IN, DD7
BULK	20		81349	MIL-T-43566, TYI, CL4, ¾ IN, OD7
BULK	21		81349	MIL-T-43566, TYI, CL4, 1 IN, OD7
BULK	22		81348	M5038-IV-2, IIN, O D7
BULK	23		81348	V-T-285TYICL1SUB CLBCOLODSISZE
BULK	24		81348	V-T-285TYIICLISU BCLBCOLODSISZE
BULK	25		81348	V-T-285TYIICLISU BCLBCOLODSLSZFF
BULK	26		81349	MIL-W-4088, TYVII , CL2, 2 IN, 0D7

CROSS REFERENCE INDEXES

FIGURE AND ITEM NUMBER INDEX

FIG.	ITEM	STOCK NUMBER	CAGEC	PART NUMBER
BULK	27		81349	MIL--W-4088, TYVII I, CL2, 1z3/32, 0D
BULK	28		81349	MIL-W-4088, TYXVI I, CL2, 1 IN, OD7
BULK	29		81349	MIL-W-44O069, TYI, CL4. 3/8 IN, 0D7
BULK	30		81349	MIL-W-44049, TYI CL4. 2IN, OD7
1	1		81337	5-4-7582-1
1	2		81337	5-4-7585-1
1	3		81337	5-4-7589-1
1	4		81337	5-4-7599-1
1	5		81337	5-4-7602-1
1	6		96906	MS51956-59
1	7		81337	5-4-7593-1
1	8		81337	5-4-7586-1
1	9		81337	5-4-7S87-1
1	10		81337	5-4-7590-1
1	11		81337	5-4-7591-1
1	12		81337	5-4-7592-2
1	13		81349	MIL-W-83420TYICO MPB
1	14		81337	5-4-7598-1
1	15		81337	5-4-7597-1
1	16		81337	5-4-7603-1
1	17		81337	5-4-7591-2
1	18		81337	5-4-7592-1
1	19		81349	MIL-W-83(120TYICO MPB
1	20		81337	5-4-7598-1
1	21		81337	5-4-7597-1
1	22		81337	5-4-7603-1
1	23		81337	5-4-7601-1
1	24		81337	5-4-7604-1
1	25		81348	V-T-285TYICL1SUB CLBCOLODS1SZE
1	26		81349	MIL-C-20696
1	27		81337	5-4-7604-1-2
1	28		81349	MIL-B-543TYVCL3S IZE11IN
1	29		81337	5-4-7604-1-4
1	30		81337	5-4-7604-1-3
1	31		81337	5-4-7604-1-5
2	1		81337	M5-4-7613-1
2	2		81349	MIL-C-44423CLI
2	3		81348	V-T-285TYIICLISU BCLBCOLODSISZFF
2	4		81348	V-T-285TYIICLISU BCLBCOLODS1SZE
2	5		81337	M5-4-7613-21
2	6		81337	MS-4-7613-l1

CROSS REFERENCE INDEXES

FIGURE AND ITEM NUMBER INDEX

FIG.	ITEM	STOCK NUMBER	CAGEC	PART NUMBER
2	7		81337	M5-4-7613-15
2	8		81337	M5-4-7613-24
2	9		81337	M5-4-7613-18
2	10		81337	M5-4-7613-12
2	11		81337	5-4-7616-14
2	12		81337	5-4-7684-1
2	13		81348	V-T-285TYICL1SUB CLBCOLODS1SZE
2	14		81337	5-4-7618-1-1
2	15		81337	5-4-7644-1
2	16		81349	MILS43770/lCWBC3
2	17		81348	V-T-285TYIICLISU BCLBCOLODSISZE
2	18		81337	5-4-7644-3
2	19		81337	5-4-76)44-4
2	20		81349	MIL-B-513TYVCL3S IZE1IN
2	21		81337	5-4-7616-2
2	22		81369	MILS43770/lCWBC3
2	23		81348	V-T-285TVIICL1SU BCLBCOLODS1SZE
2	24		81337	5-6-7616-2-2
2	25		81337	5-4-7616-1
2	26		81349	MILS43770/lCWBC3
2	27		81348	V-T-285TYIICL1SU BCLBCOLODS1SZE
2	28		81337	5-4-7616-1-2
2	29		81348	V-T-28S5TYICL1SUB CLBCOLODS1SZE
2	30		81337	M5-4-7639-10
2	31		81337	M5-4-7639-8
2	32		81337	M5-4-7639-14
2	33		81337	M5-4-7639-7
2	34		81337	M5-4-7639-15
2	35		81349	MIL-C-44423CL1
2	36		81349	MITL-C-44423CL1
2	37		81337	M5-4-7639-9
2	38		81348	V-T-285TYICL1SUB CLBCOLODS1SZE
2	39		81348	V-T-2851YIICLISU BCLBCOLODS1SZE
2	40		81349	MIL-C-44423CL1
2	41		81348	V-T-28STYIICLISU 13CLBCOLODS1SZE
2	42		81349	MIL-C-44423CL1
2	43		81348	V-T-285TYIICLISU BCLBCOLODS1SZE
2	44		81337	M5-4-7634-13
2	45		81337	MS-4-7634-9
2	46		81337	M5-4-7634-10
2	47		81349	MIL-C-44423CL1

CROSS REFERENCE INDEXES

FIGURE AND ITEM NUMBER INDEX

FIG.	ITEM	STOCK NUMBER	CAGEC	PART NUMBER
2	48		81337	M5-4-7634-8
2	49		81337	M5-4-7634-7
2	50		81349	MIL-C-44623CLI
2	51		81349	MIL-C-44423CL1
2	52		81337	MS-4-7634-12
2	53		81348	V-T-285TYICLISUB CLBCOLODS1SZE
2	54		81349	MIL-C-44423CL1
2	55		81348	V-T-28STYICLlSUB CLBCOLODSISZE
2	56		81349	MIL-C-44423CL1
2	57		81348	V-T-285TYIICLISU BCLBCOLODS1SZE
2	58		81348	V-T-285TYICLlSUB CLBCOLODSLSZE
2	59		81349	MIL-C-44423CL1
2	60		81348	V-T-285TYIICLISU BCLBCOLODS1SZE
2	61		81349	MlIL-C-44423CLI
2	62		81348	V-T-285TYICLISUB CLBCOLODSISZE
2	63		81349	MIL-C-44423CL1
2	64		81337	MS-4-7629-9
2	65		81337	MS-4-7629-11
2	66		81337	M5-4-7629-12
2	67		81337	M5-4-7629-15
2	68		81349	MIL-C-44423CL1
2	69		81349	MIL--C-44423CL1
2	70		81337	h5-4-7629-10
2	71		81337	M5-4-7629-13
2	72		81337	M5-4-7629-14
2	73		81337	M5-4-7629-16
2	74		81337	MS-4-7629-18
2	75		81337	M5-4-7629-19
2	76		81348	V-T-285TYICLlSUB CLBCOLODSISZE
2	77		81349	MIL-C-44423CL1
2	78		81348	V-T-285TYICLlSUB CLBCOLODSISZE
2	79		81349	MIL-C-44423CL1
2	80		81348	V-T-285TYIICLISU BCLBCOLODSISZFF
2	81		81348	V-T-285TYIC1SUB CLBCOLODS1SZE
2	82		81337	MS-4-7623-11
2	83		81337	M5-4-7623-12
2	84		81337	M5-4-76)23-15
2	85		81337	M5-4-7623-9
2	86		81337	M5-4-7623-1O
2	87		81349	MIL-C-44423CLI
2	88		81337	M5-4-7623-3

CROSS REFERENCE INDEXES

FIGURE AND ITEM NUMBER INDEX

FIG.	ITEM	STOCK NUMBER	CAGEC	PART NUMBER
2	89		81349	MIL-C-44423CL1
2	90		81337	M5-4-7623-14
2	91		81337	M5-4-7623-13
2	92		81337	M5-4-7623-16
2	93		81348	V-T-285TYIICL1SU BCLBCOLODS1SZE
2	94		81337	5-4-7617-1
2	95		81337	5-4-7617-2
2	96		813(8	V-T-285TYIICL1SU BCLBCOLODS1SZFF
2	97		81337	M5-4-7614-10
2	98		81337	M5-4-7614-9
2	99		81337	M5-4-7614-15
2	100		81337	MS-4-7614-17
2	101		81348	V-T-285TYIICL1SU BCLBCOLODS1SZE
3	1		81337	M5-4-7649-1
3	1		81337	M5-4-7649-2
3	2		81337	M5-4-7649-1-38
3	2		81337	M5-4-7649-2-38
3	3		81337	M5-4-7649-1-68
3	3		81337	M5-4-7649-2-68
3	4		81337	M5-4-7649-1-67
3	4		81337	M5-4-7649-2-67
3	5		81337	M5-4-7649-1-40
3	5		81337	MS-4-7649-2-40
3	6		81337	M5-4--7649-1-41
3	6		81337	M5-4-7649-2-41
3	7		81349	MIL-C-44423CL2
3	7		81349	MIL-C-44423CL3
3	8		81337	M5-4-7649--1-65
3	8		81337	M5-4-7649-2-65
3	9		81337	M5-4-7649-1-66
3	9		81337	M5-4-7649-2-66
3	1		81337	M5-4-7649-1-70
3	10		81337	M5--4-7649-2-70
3	1		81337	M5-4-7649-1-69
3	11		81337	M5-4-7649-2-69
3	12		81337	M5-4-7649-1-54
3	12		81337	M5-4-7649-2-54
3	13		81337	M5-4-7649-1-50
3	13		81337	M5-4-7649-2-50
3	14		81337	M5-4-7649-1-51
3	14		81337	MS-4-7649-2-51
3	15		81349	MIL-C-44423CL1
3	15		81349	MIL-C-44423CL2
3	16		81337	M5-4-7649-1-71
3	16		81337	MS-4-7649-2-71
3	17		81337	M5-4-7649-1-72
3	17		81337	M5-4-7649-2-72
3	18		81349	MIL-C-44423CL1

CROSS REFERENCE INDEXES

FIGURE AND ITEM NUMBER INDEX

FIG.	ITEM	STOCK NUMBER	CAGEC	PART NUMBER
3	18		81349	MIL-C-44423CL2
3	19		81349	MIL-C-44423CL2
3	19		81349	MIL-C-44423CL3
3	20		81348	V-T-285TYIICL1SU BCLBCOLODS1SZE
3	20		81348	V--T-285TYIICL1SU BCLBCOLODS1SZE
3	21		96906	MS2023BPS4
3	21		96906	MS2023BPS4
3	22		81337	5-4-7606-1-1
3	22		81337	5-4-7606-1-1
3	23		81337	N5-4--7649-1-29
3	23		81337	M5-4-7649-2-29
3	24		81337	M5-4-7649-1-52
3	24		81337	M5-4-7649-2-52
3	25		81337	M5-4-7649-1-37
3	25		81337	M5-4-7649-2-37
3	26		81337	M5-4-7649-1-49
3	26		81337	M5-4-7649-2-49
3	27		96906	MS20230-BPS2
3	27		96906	MS20230-BPS2
3	28		81349	MIL-C-44423CL2
s	28		81349	MIL-C-44423CL3
3	29		81337	M5-4-7649-1-20
3	29		81337	M5-4-7649-2-20
3	30		81337	MS-4-7649-1-47
3	30		81337	M5-4-7649-2-47
3	31		81337	M5-4-7601-1-48
3	31		81337	M5-4-7649-2-48
3	32		81337	M5-4-7649-1-32
3	32		81337	MS-4-7649-2-32
3	33		81337	M5-4-7649-1-46
3	33		81337	M5-4-7649-2-46
3	34		81349	MIL-C-44423CL1
3	34		81349	MIL-C-44423CL2
3	35		81337	M5-4-7649-1-61
3	35		81337	M5-4-7649-2-61
3	36		81337	M5-4-7649-1-59
3	36		81337	M5-4-7649-2-59
3	37		81337	M5-4-7649-158
3	37		81337	MS-4-7649-2-58
3	38		81337	M5-4-7649-1-57
3	38		81337	M5-4-7649-2-57
3	39		81349	MIL-C-44423CL2
3	39		81349	MIL-C-44423CL3
3	40		81349	MIL-C-44'i23CL2
3	40		81349	MIL-C-44423CL3
3	41		81349	MIL-C-44423CL1
3	41		81349	MIL-C-44423CL2
3	42		81349	MIL-C-44423CL1
3	42		81349	MIL-C-44423CL2

CROSS REFERENCE INDEXES

FIGURE AND ITEM NUMBER INDEX

FIG.	ITEM	STOCK NUMBER	CAGEC	PART NUMBER
4	1		81337	5-4-7647-1
4	2		81337	5-4-7647-2
4	3		70474	91851
4	4		81337	5-4--7647-4
4	5		81337	5-4--7647-3
4	6		81337	5-4-7647-5
4	7		81349	MIL-C-20696
5	1		81337	5-4-7679-1
5	2		81349	MIL-C-43256
5	3		96906	MS20230-BPS4
5	4		81348	V-T-285TYIICL1SU BCLBCOLCG483SZE
5	5		81349	MIL--C-20696CL2
5	6		81349	MIL-P-501,TYI,AL
6	1		81337	M5-4-7661-1
6	2		81337	M5-4-7661-13
6	3		81337	M5-4-7661-14
6	4		81349	MIL-C-10859
6	5		81349	MIL--C-10859
6	6		81349	MIL-C-10859
6	7		81337	M5-4-7661-42
6	8		81337	M5-4-7661-15
6	9		81337	M5-4-7661-16
6	10		81337	M5-4-7661-18
6	11		81337	M5-4-7661-17
6	12		96906	MS20230-BPS2
6	13		81337	M5-4-7661-49
6	14		81348	V-T-285TYIICL1SU BCLBCOLCDS1SZE
6	15		81337	M5-4-7667-2
6	16		81337	M5--4-7661-40
6	17		81349	MILS43770/ISW2E2
6	18		81349	MIL-R--3390
6	19		81337	M5-4-7661-29
6	20		81337	MS-4--7661-31
6	21		81337	MS-4-7661-30
6	22		81337	M5-4-7661-32
6	23		81349	MIL-B-543TYVCL3S IZEIIN
6	24		81348	V-T-285TYIICLISU BCLBCOLODS1SZE
6	25		81337	M5-4-7661-20
6	26		81337	M5-4-7661-21
6	27		81337	M5--4-7661-39
6	28		81337	M5-4-7661-38
6	29		81349	MIL-C-10859
6	30		81337	M5-4--7661-25
6	31		81337	M5-4-7661-24
6	32		81349	MIL-C-10859
6	33		81349	MIL-C--10859
6	34		81337	M5-4-7661-26

APPENDIX D

COMPONENTS OF END ITEM AND BASIC ISSUE ITEM LISTS

SECTION I. INTRODUCTION

D-1. SCOPE. This appendix lists end items and basic issue items for the Five Soldier Crew Tent (FSCT) to help you inventory items required for safe and efficient operation.

D-2. GENERAL. The End Items and Basic Issue Items Lists are divided into the following sections:

a. *Section II. End Item List*. This listing is for informational purposes only, and does not authorize replacements. The End Item list contains items that must be with the system whenever it is issued or transferred between property accounts. However, these items are removed and separately packaged for transportation or shipment. The end items are illustrated to help identify them.

b. *Section III. Basic Issue Item List*. This listing is the minimum number of items needed to operate and perform emergency repairs on the FSCT. Although Basic Issue Items are shipped and packaged separately, they must be with the FSCT during operation and whenever it , is transferred between property accounts. The hard-to-identify items are illustrated. This manual is your authority to request/requisition replacement Basic Issue Items, based on TOE/MTOE authorization of the end item.

D-3. EXPLANATION OF COLUMNS. The following provides an explanation of columns found in the End Item and Basic Issue Item Table Listing:

a. *Column (1)-Illustration Number (Illus Number).* Indicates the number of the illustration in which the item is shown.

b. *Column (2)-National Stock Number*. Indicates the National Stock Number assigned to the item. It will be used for requisitioning purposes.

c. *Column (3)-Description*. Indicates the Federal item name and, if required, a minimum description to identify and locate the item. The last line for each item indicates the Contractor and Government Entity Code (CAGEC) in parentheses, followed by the part number.

If the item you need is not the same for different models of the equipment, a Usable On Code will appear on the right side of the description column on the same line as the part number. These codes are identified below:

D-3. EXPLANATION OF COLUMNS- Cont'd

CODE	USED ON
FDR	Type I
FDU	Type II

d. *Column (4)-Unit of Measure (U/M).* Indicates the measure used in performing the actual operational/maintenance function. A two letter abbreviation (e.g., EA, in, PR) is used as the measure.

e. *Column (5)-Quantity required (Qty rqr.)* Indicates how many of an item are authorized to be used with/on the equipment.

SECTION II. COMPONENTS OF END ITEM

(1) ILLUS NUMBER	(2) NATIONAL STOCK NUMBER	(3) DESCRIPTION CAGEC and Part Number	Usable On Code	(4) U/I	(5) Qty rqr
		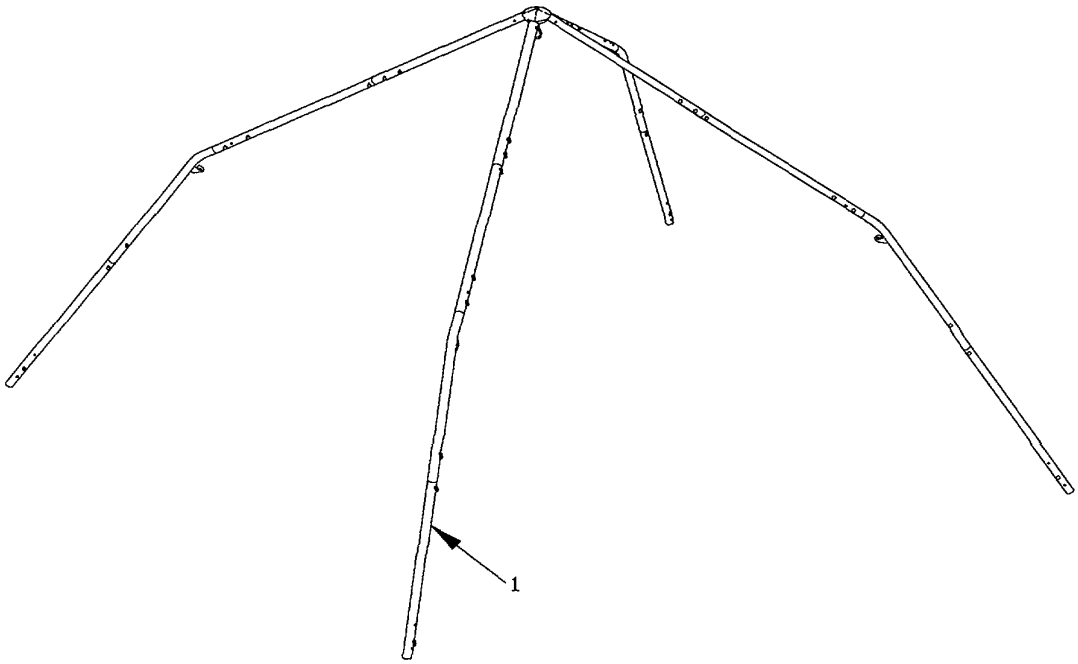			
1		Frame Assembly, FSCT (81337) M5-4-7582-1		EA	1

SECTION II. COMPONENTS OF END ITEM (Continued)

(1) ILLUS NUMBER	(2) NATIONAL STOCK NUMBER	(3) DESCRIPTION CAGEC and Part Number	Usable On Code	(4) U/I	(5) Qty rqr

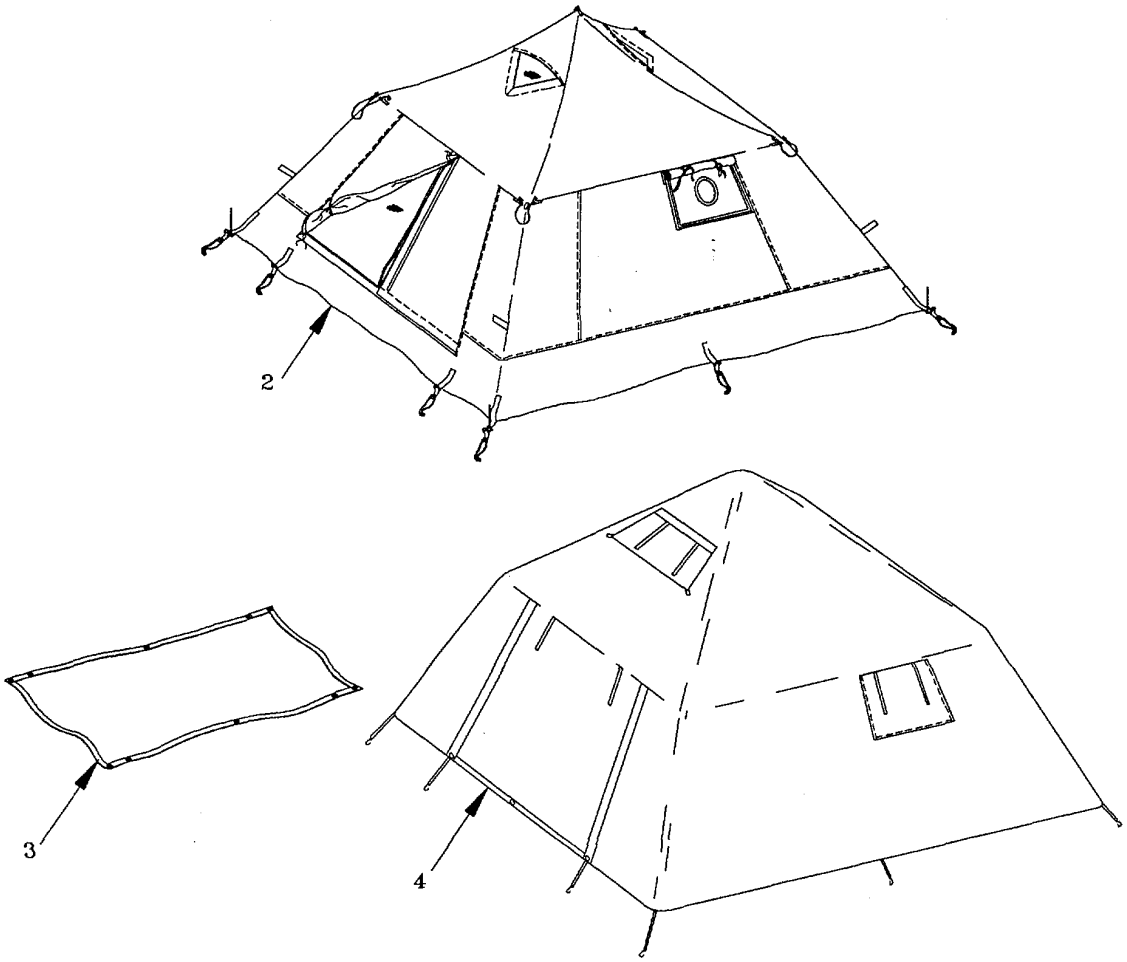

2		Tent Body Assembly (81337) M5-4-7613-1	EA	1
3		Gear Loft Assembly (81337) 5-4-7646-1)	EA	1
4		Fly Assy, FSCT (Type I) (81337) M5-4-7649-1 FDR	EA	1
		Fly Assy, FSCT (Type II) (81337) M5-4-7649-2 FDU	EA	1

SECTION II. COMPONENTS OF END ITEM (Continued)

(1) ILLUS NUMBER	(2) NATIONAL STOCK NUMBER	(3) DESCRIPTION CAGEC and Part Number	Usable On Code	(4) U/I	(5) Qty rqr
5		Liner Assembly, FSCT (81337) M5-4-7661-1 FDU		EA	1
6		Tent Cover Assembly (81337) M5-4-7647-1		EA	1
7		FSCT Pegs, Bag and Contents (81337) M5-4-7678-1		EA	1

SECTION II. COMPONENTS OF END ITEM (Continued)

(1) ILLUS NUMBER	(2) NATIONAL STOCK NUMBER	(3) DESCRIPTION CAGEC and Part Number	Usable On Code	(4) U/I	(5) Qty rqr
		Tentage Repair Kit (81337) 5-4-7683-1		EA	1

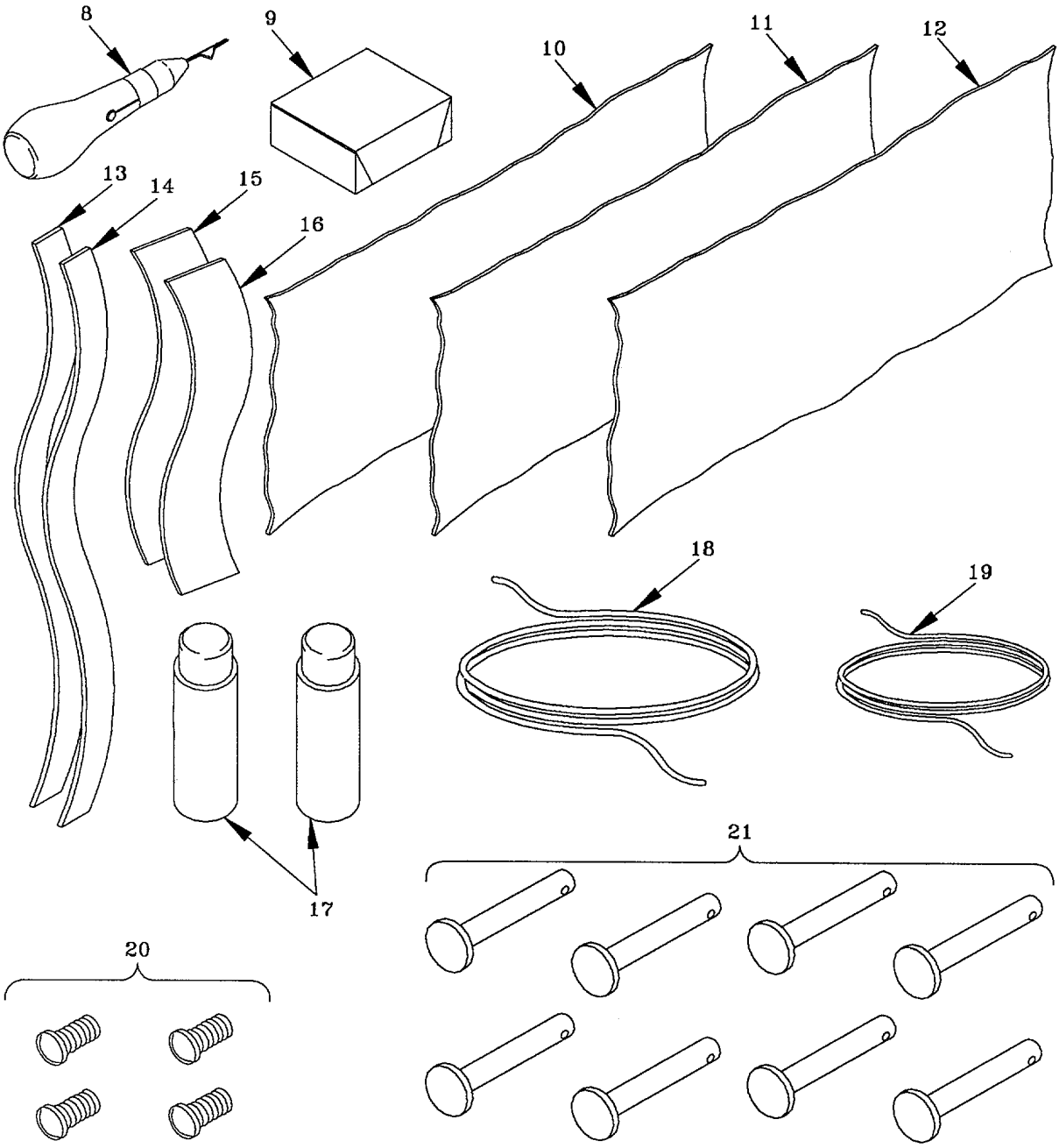

SECTION II. COMPONENTS OF END ITEM (Continued)

(1) ILLUS NUMBER	(2) NATIONAL STOCK NUMBER	(3) DESCRIPTION CAGEC and Part Number	Usable On Code	(4) U/I	(5) Qty rqr
		Tentage Repair Kit (Continued) (81337) 5-4-7683-1		EA	1

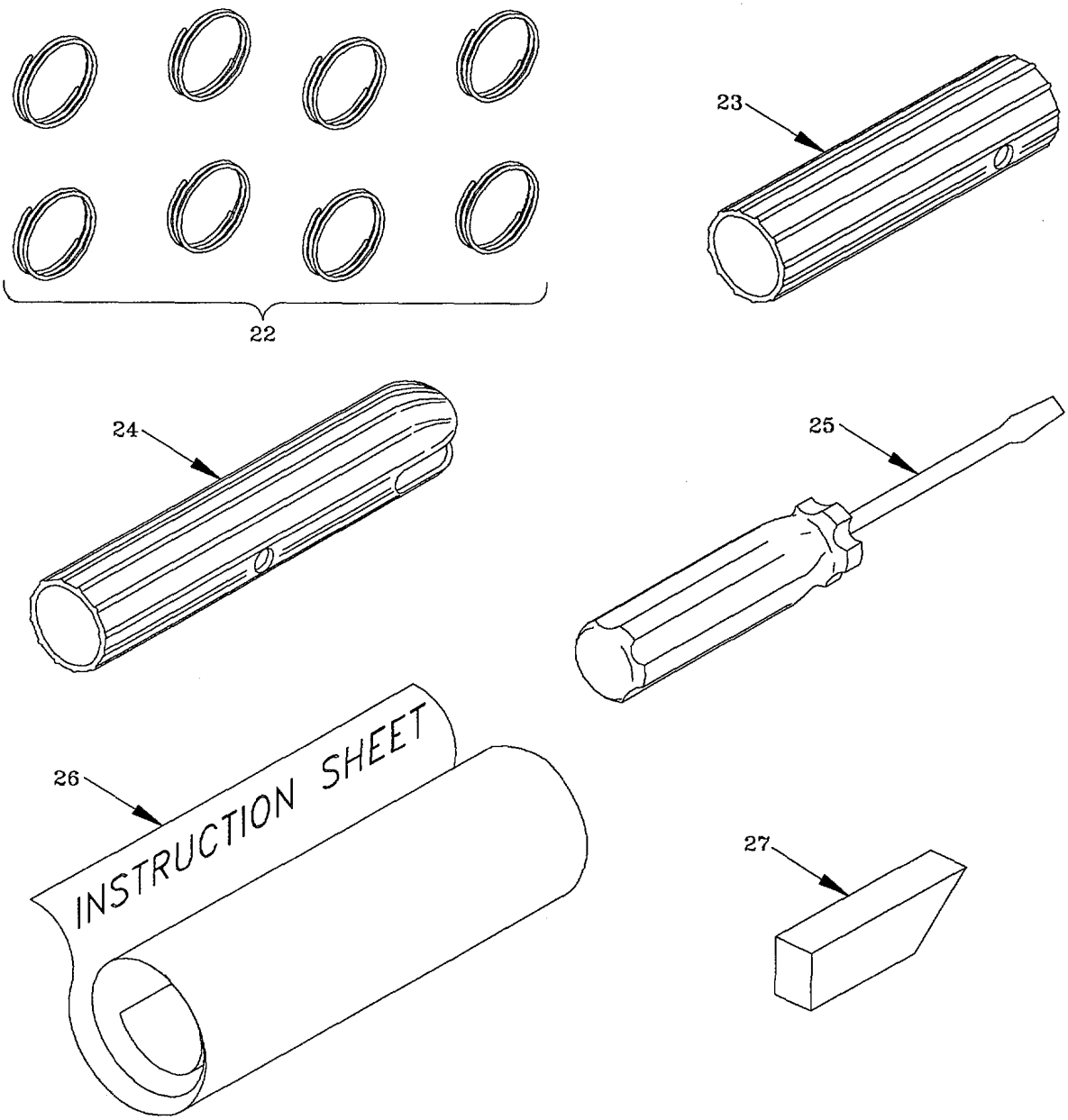

SECTION II. COMPONENTS OF END ITEM (Continued)

(1) ILLUS NUMBER	(2) NATIONAL STOCK NUMBER	(3) DESCRIPTION CAGEC and Part Number	Usable On Code	(4) U/I	(5) Qty rqr
		Tentage Repair Kit (Continued)			
8		Sewing Awl (81337) 5-4-7685-1		EA	1
9		Repair Tape (81337) 5-4-7688-1		EA	1
10		Cloth, Class 1 (81349) MIL-C-44423		EA	1
11		Cloth, Class 2 (81349) MIL-C-44423		EA	1
12		Cloth, Class 3 (81349) MIL-C-44423		EA	1
13		Fastener Tape, Hook, 1 in. (81349) MIL-F-21840		EA	1
14		Fastener Tape, Loop, 1 in. (81349) MIL-F-21840		EA	1
15		Fastener Tape, Hook, 2 in. (81349) MIL-F-21840		EA	1
16		Fastener Tape, Loop, 2 in. (81349) MIL-F-21840		EA	1
17		Seam Sealer (81337) 5-4-7619-1		EA	2
18		Rope (81349) MIL-R-1670		EA	1
19		Accessory Cord (81337) 5-4-7684-1		EA	1
20		Screw (96906) MS1956-59		EA	4
21		Frame Pin (81337) 5-4-7589-1		EA	8

SECTION II. COMPONENTS OF END ITEM (Continued)

(1) ILLUS NUMBER	(2) NATIONAL STOCK NUMBER	(3) DESCRIPTION CAGEC and Part Number	Usable On Code	(4) U/I	(5) Qty rqr
22		Split Ring (81337) 5-4-7599-1		EA	8
23		Frame Joint Sleeve (81337) 5-4-7591-2		EA	1
24		Frame Joint Sleeve (81337) 5-4-7591-1		EA	1
25	5120-00-278-1283	Screwdriver, Flat Tip		EA	1
26		Instruction Label (81337) 5-4-7674-1		EA	1
27		Zipperease (96980) ZE-2		EA	EA

SECTION III. BASIC ISSUE ITEMS

(1) ILLUS NUMBER	(2) NATIONAL STOCK NUMBER	(3) DESCRIPTION CAGEC and Part Number	Usable On Code	(4) U/I	(5) Qty rqr
		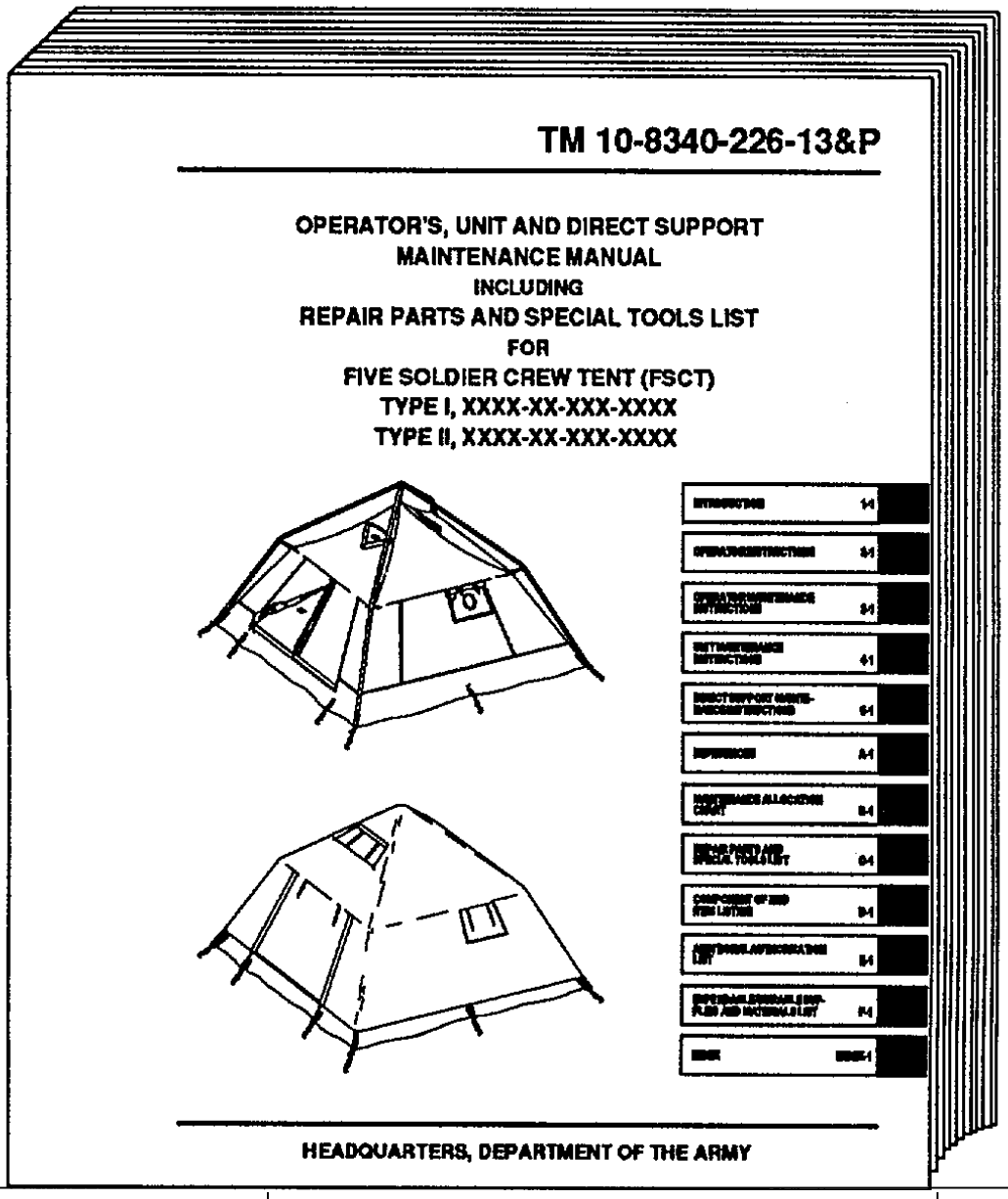			
1		TM 10-8340-226-13&P Operator's, Unit, and Direct Support Maintenance Manual		EA	1

APPENDIX E

ADDITIONAL AUTHORIZATION LIST

SECTION I. INTRODUCTION

E-1. SCOPE. This appendix lists additional items authorized for use with the Five Soldier Crew Tent.

E-2. GENERAL. Section II. identifies items that are not used routinely with, and that do not have to accompany the FSCT or be turned in with it.

E-3. EXPLANATION OF LISTING. National Stock Number, descriptions, and quantities are provided to help you identify and request the additional items you require to support this equipment. The items are listed in alphabetical sequence by item name under the type document (i.e. CTA, MTOE, TDA or JTA) which authorizes the item(s) to you.

SECTION II. COMPONENTS OF END ITEM

(1) ILLUS NUMBER	(2) NATIONAL STOCK NUMBER	(3) DESCRIPTION CAGEC and Part Number	Usable On Code	(4) U/I	(5) Qty rqr
1	5120-00-926-7116	Mallet, Wood		EA	1

APPENDIX F

EXPENDABLE/DURABLE SUPPLIES AND MATERIALS LIST

SECTION I. INTRODUCTION

F-1. SCOPE. This appendix lists expendable supplies and materials you will need to operate and maintain the Five Soldier Crew Tent. The listing is for informational purposes only and is not authority to requisition the listed items. These items are authorized to you by CTA 50-970, Expendable Items (Except Medical, Class V, Repair Parts, and Heraldic Items), or CTA 8-100, Army Medical Department Expendable/Durable Items.

F-2. EXPLANATION OF COLUMNS.

a. *Column (1)-Item number.* This number is assigned to the entry in the listing and is referenced in the narrative instructions to identify the material (e.g., “Use cleaning compound, ” Appendix F, item 2).

b. *Column (2)-Level.* This column identifies the lowest level of maintenance that requires the listed item.

C	Operator/Crew
O	Unit Maintenance
F	Direct Support Maintenance
H	General Support Maintenance
D	Maintenance

c. *Column (3)-National Stock Number.* This is the National Stock Number assigned to the item; use it to request or requisition the item.

d. *Column (4)-Description.* Indicates the Federal item name and, if required, a description to identify the item. The last line for each item indicates the Federal Supply code for manufacturer (FSCM) in parentheses followed by the part number.

e. *Column (5)-Unit of Measure (U/M).* Indicates the measure used in performing the actual maintenance function. This measure is expressed by a two-character alphabetical abbreviation (e.g.,ea, in, pr). If the unit of measure differs from the unit of issue, requisition the lowest unit of issue that will satisfy your requirements.

APPENDIX F

SECTION II.

EXPENDABLE/DURABLE SUPPLIES AND MATERIALS LIST

(1) ITEM NUMBER	(2) LEVEL	(3) NATIONAL STOCK NUMBER	DESCRIPTION	(5) U/M
1	C	7390-00-965-4868	Soap, Toilet, Cake, Hand	Box
2	C	7920-00-240-7174	Brush, Scrub, w/o Handle	Ea
3	O	6810-00-205-6786	Denatured Alcohol	Qt
4	O	4240-01-204-2827	Filter, Cartridge	Ea
5	O		Gloves, Latex- Nitrile 695456, Sz 8-8 ½ 695457, Sz 9-9 ½ 695458, Sz 10-10 ½	Pr
6	O	4240-01-244-2698	Goggles, Chemical Splash	Ea
7	O	8030-01-350-4984	K-Kote Seam Sealer	Gal
8	O	 4240-01-315-1864 4240-01-315-1863 4240-01-311-9013	Respirator Sz Small Sz Medium Sz Large	Ea
9	O	7510-00-205-0371	Rubber Band, ½ in, 3-½ in long	Box
10	O	7920-00-205-1711	Wiping Rags	Bale

ALPHABETIC INDEX

A
Administrative Storage Requirements, 4-12
Assembly and Installation, 2-5
Assembly and Use, Preparation for, 2-3

B
Basic Issue Items, D

C
Capabilities, and Features, 1-11
Common Tools and Equipment, 4-2
Components of End Item and Basic Issue Items List, D
Controls and Indicators, 2-1
Corrosion Prevention and Control, 1-8 D

D
Decals and Instruction Plates, 2-7:
Destruction of Army Materiel to Prevent Enemy Use, 1-3
Differences between Models, 1-13
Direct Support Maintenance Procedures, 5-5

E
Equipment Data, 1-14
Equipment Improvement Recommendations (EIR), 1-7
Expendable/Durable Supplies and Materials List, F-I

I
Inspecting Unpacked Equipment, 4-6

L
List of Abbreviations and Terms, 1-10
Location and Description of Major Components, 1-12
Lubricating Instructions, 3-1, 4-1

M
Maintenance Allocation Chart (MAC), B
Maintenance Forms and Records, 1-2
Major Components, Location and Description of, 1-12

N
Nomenclature Cross-Reference, 1-6

O
Operation of Doors and Windows, 2-6
Operation of FSCT, 1-15
Operation Under Unusual Conditions, 2-9
Operator Maintenance Procedures, 3-4, 5, 6, 7
Operator PMCS Procedures, 2-2
Operator's Controls and Indicators, 2-1

P
Preparation for Movement, 2-8
Preparation for Storage or Shipment, 1-4, 4-12
Preservation, 4-13-7

R
References, A
Repair Parts and Special Tools List, C
Reporting Equipment Improvement Recommendations (EIR), 1-7 S

S
Special Tools, 4-3

T
Troubleshooting Procedures, Operator

U
Unit Maintenance Procedures, 4-9
Unit PMCS Procedures, 4-7 Unpacking and Inspection, 2-4, 4-5

W
Warranty Information, 1-9

By Order of the Secretary of the Army:

GORDON R. SULLIVAN
General, United States Army
Chief of Staff

Official:

MILTON H. HAMILTON
Administrative Assistant to the
Secretary of the Army
07671

DISTRIBUTION:
To be distributed in accordance with DA Form 1 2-25-E, block no. 6248, requirements for TM 10-8340-226-13&P.

☆U.S. GOVERNMENT PRINTING OFFICE: 1994-655-028/20019

TEAR ALONG PERFORATED LINE

RECOMMENDED CHANGES TO EQUIPMENT TECHNICAL PUBLICATIONS

THEN...JOT DOWN THE DOPE ABOUT IT ON THIS FORM. CAREFULLY TEAR IT OUT, FOLD IT AND DROP IT IN THE MAIL.

SOMETHING WRONG WITH PUBLICATION

FROM: (PRINT YOUR UNIT'S COMPLETE ADDRESS)

DATE SENT

PUBLICATION NUMBER	PUBLICATION DATE	PUBLICATION TITLE

BE EXACT PIN-POINT WHERE IT IS

PAGE NO.	PARA-GRAPH	FIGURE NO.	TABLE NO.

IN THIS SPACE, TELL WHAT IS WRONG AND WHAT SHOULD BE DONE ABOUT IT.

PRINTED NAME, GRADE OR TITLE AND TELEPHONE NUMBER	SIGN HERE

DA FORM 1 JUL 79 2028-2

PREVIOUS EDITIONS ARE OBSOLETE.

P.S.--IF YOUR OUTFIT WANTS TO KNOW ABOUT YOUR RECOMMENDATION MAKE A CARBON COPY OF THIS AND GIVE IT TO YOUR HEADQUARTERS.

The Metric System and Equivalents

Linear Measure

1 centimeter = 10 millimeters = .39 inch
1 decimeter = 10 centimeters = 3.94 inches
1 meter = 10 decimeters = 39.37 inches
1 dekameter = 10 meters = 32.8 feet
1 hectometer = 10 dekameters = 328.08 feet
1 kilometer = 10 hectometers = 3,280.8 feet

Weights

1 centigram = 10 milligrams = .15 grain
1 decigram = 10 centigrams = 1.54 grains
1 gram = 10 decigram = .035 ounce
1 dekagram = 10 grams = .35 ounce
1 hectogram = 10 dekagrams = 3.52 ounces
1 kilogram = 10 hectograms = 2.2 pounds
1 quintal = 100 kilograms = 220.46 pounds
1 metric ton = 10 quintals = 1.1 short tons

Liquid Measure

1 centiliter = 10 milliters = .34 fl. ounce
1 deciliter = 10 centiliters = 3.38 fl. ounces
1 liter = 10 deciliters = 33.81 fl. ounces
1 dekaliter = 10 liters = 2.64 gallons
1 hectoliter = 10 dekaliters = 26.42 gallons
1 kiloliter = 10 hectoliters = 264.18 gallons

Square Measure

1 sq. centimeter = 100 sq. millimeters = .155 sq. inch
1 sq. decimeter = 100 sq. centimeters = 15.5 sq. inches
1 sq. meter (centare) = 100 sq. decimeters = 10.76 sq. feet
1 sq. dekameter (are) = 100 sq. meters = 1,076.4 sq. feet
1 sq. hectometer (hectare) = 100 sq. dekameters = 2.47 acres
1 sq. kilometer = 100 sq. hectometers = .386 sq. mile

Cubic Measure

1 cu. centimeter = 1000 cu. millimeters = .06 cu. inch
1 cu. decimeter = 1000 cu. centimeters = 61.02 cu. inches
1 cu. meter = 1000 cu. decimeters = 35.31 cu. feet

Approximate Conversion Factors

To change	*To*	*Multiply by*	*To change*	*To*	*Multiply by*
inches	centimeters	2.540	ounce-inches	newton-meters	.007062
feet	meters	.305	centimeters	inches	.394
yards	meters	.914	meters	feet	3.280
miles	kilometers	1.609	meters	yards	1.094
square inches	square centimeters	6.451	kilometers	miles	.621
square feet	square meters	.093	square centimeters	square inches	.155
square yards	square meters	.836	square meters	square feet	10.764
square miles	square kilometers	2.590	square meters	square yards	1.196
acres	square hectometers	.405	square kilometers	square miles	.386
cubic feet	cubic meters	.028	square hectometers	acres	2.471
cubic yards	cubic meters	.765	cubic meters	cubic feet	35.315
fluid ounces	milliliters	29,573	cubic meters	cubic yards	1.308
pints	liters	.473	milliliters	fluid ounces	.034
quarts	liters	.946	liters	pints	2.113
gallons	liters	3.785	liters	quarts	1.057
ounces	grams	28.349	liters	gallons	.264
pounds	kilograms	.454	grams	ounces	.035
short tons	metric tons	.907	kilograms	pounds	2.205
pound-feet	newton-meters	1.356	metric tons	short tons	1.102
pound-inches	newton-meters	.11296			

Temperature (Exact)

°F	Fahrenheit temperature	5/9 (after subtracting 32)	Celsius temperature	°C

PIN: 073356-000